ELECTRONIC FUEL INJECTION (EFI)

SERVICE TOOLS

Description	Part Number	Page
DIGITAL INDUCTION TACHOMETER	529 014 500	3
ECM ADAPTER TOOL	529 036 166	8, 26, 33–34, 36, 38–39
FLUKE 115 MULTIMETER	529 035 868	7–8, 17–18, 25–26, 29, 33–34, 37
FUEL HOSE DISCONNECT TOOL	529 036 037	14

SERVICE TOOLS – OTHER SUPPLIER

Description	Part Number	Page
FLUKE AUTOMOTIVE BACK PROBE PIN	TP40	30
FLUKE SUREGRIP INSULATED TEST LEADS	TL224	30

SERVICE PRODUCTS

Description	Part Number	Page
DIELECTRIC GREASE	293 550 004	28, 31, 35, 38–39
LOCTITE 243 (BLUE)	293 800 060	28, 39
LOCTITE 518	293 800 038	38

GENERAL

⚠ WARNING

When electrically disconnecting or removing the throttle body from the intake manifold, always remove the tether cord from the engine cut-off switch and disconnect the battery.

⚠ WARNING

Always disconnect battery prior to working on the fuel system. Always disconnect battery exactly in the specified order, BLACK (-) cable first. Electrical connections should be disconnected prior to disconnecting fuel lines.

⚠ WARNING

Fuel is flammable and explosive under certain conditions. Work in a well ventilated area. Do not smoke or allow open flames or sparks in the vicinity.

⚠ WARNING

Fuel lines remain under pressure at all times. Always proceed with care and use appropriate safety equipment when working on a pressurized fuel system. Wear safety glasses. Do not allow fuel to spill on hot engine parts and/or on electrical connectors. Proceed with care when removing or installing high pressure test equipment, or disconnecting fuel line connections. Wipe off any fuel spillage in the bilge. Never use a hose pincher on high pressure hoses.

Cover the fuel line connection with an absorbent shop rag before disconnecting them. Slowly disconnect the fuel hose to minimize spilling.

When the repair is completed, ensure the hose from the fuel rail to the fuel pump is properly connected and secured in its support. Perform the *FUEL SYSTEM HIGH PRESSURE LEAK TEST* as described in *FUEL TANK AND FUEL PUMP* subsection.

⚠ WARNING

Replace any damaged, leaking or deteriorated fuel lines or connections. After working on the fuel system, always pressurize the fuel system and check for fuel leaks. Refer to *FUEL SYSTEM PRESSURIZATION* in *FUEL TANK AND FUEL PUMP* subsection.

⚠ WARNING

Always perform the fuel system high pressure leak test if any fuel line has been removed or disconnected from a component.

⚠ WARNING

If a gasoline leak and/or odor is present, do not start the engine. Repair the leak.

SYSTEM DESCRIPTION

The electronic fuel injection system (EFI) is comprised of various sensors used for detecting ongoing operating conditions of the engine, and includes all the components that perform the required adjustments to the engine.

Electrical System

ECM (Engine Control Module)

The ECM reads input signals that it receives from the throttle lever as well as various sensors. Through calculation of several variables, which it compares to stored parameters (fuel maps), the ECM controls the iTC (intelligent Throttle Control), the injection system and the ignition system to meet driver demands and to ensure safe engine operation.

Through its management of the engine systems, the ECM ensures the engine is delivering optimum performance, fuel economy and meets emission regulations. The ECM also controls idle RPM by modulating the electric throttle actuator (ETA) and limits maximum engine speed through ETA, the ignition system, and fuel injection system.

EFI Sensors

To control the injection system, the engine management uses input signals from the following sensors:

- Camshaft position sensor (CAPS)
- Crankshaft position sensor (CPS)
- Manifold absolute pressure and temperature sensor (MAPTS)
- Throttle position sensor (TPS)
- Throttle accelerator sensor (TAS).

The ECM reads the inputs from the sensors which it compares to predetermined parameters stored in the ECM (fuel and ignition maps), makes computations, and activates the outputs accordingly (injectors, ignition coils etc.).

Air Intake System

Throttle Body

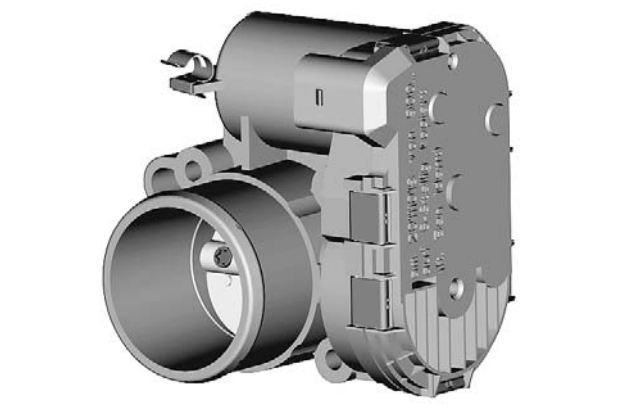

smr2014-029-001

A 46 mm throttle body is mounted on the intake manifold.

Air for combustion is drawn in by the engine. The air flows through the throttle body and is controlled by a throttle plate.

Fitted on the throttle body, an electric throttle actuator (ETA) allows the ECM to electronically control the throttle plate opening which regulates the amount of air that enters the engine, and therefore engine speed.

There is no idle air control valve (IACV).

Fuel System

Fuel Rail

A fuel rail is mounted on the intake manifold. The fuel rail, which is used to secure the injectors to the manifold, also provides to the injectors the fuel pressure that it receives from the fuel pump.

The fuel pressure applied to the fuel rail is regulated by the fuel pressure regulator located in the fuel pump module.

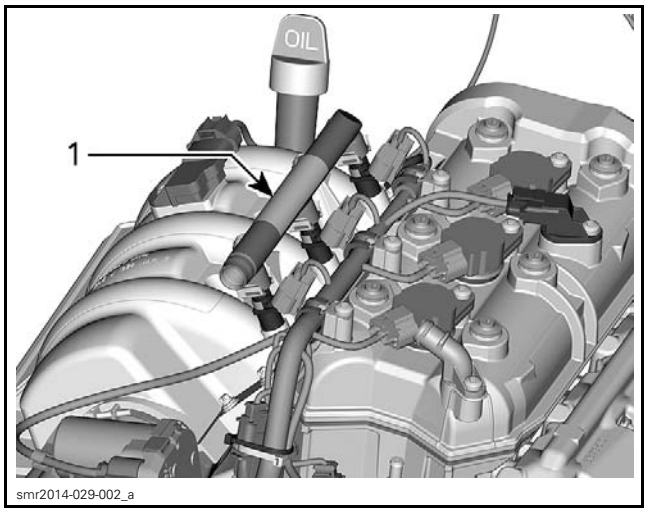

1. Fuel rail

Fuel Injectors

Three fuel injectors are used to inject fuel into the intake ports of the cylinder head. One injector is used per cylinder.

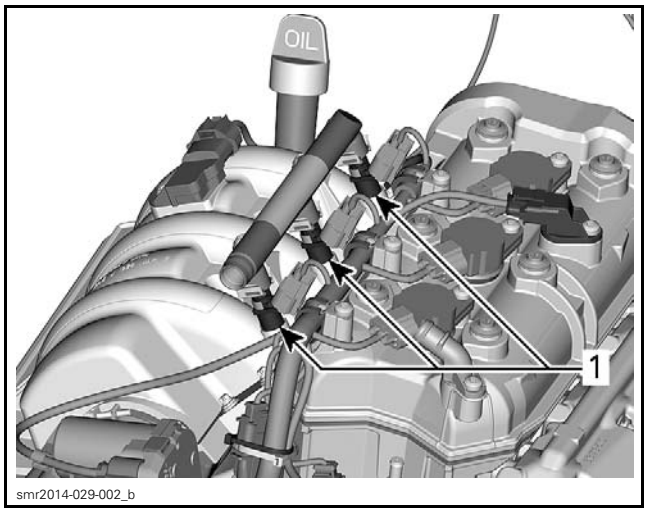

1. Fuel injectors

Fuel is injected in accordance with injection signals received from the ECM.

Fuel Pump

An electric fuel pump with an integrated pressure regulator and fuel system filters is used. For more details on the fuel pump unit, refer to *FUEL TANK AND FUEL PUMP* subsection.

ADJUSTMENTS

IDLE SPEED

Idle speed is not adjustable. The EMS (Engine Management System) controls the idle speed of the engine through the iTC system by controlling throttle plate opening using the ETA (electric throttle actuator).

With the engine running, engine RPM may be verified using the applicable B.U.D.S. software version, refer to *COMMUNICATION TOOLS AND B.U.D.S.* subsection.

NOTICE **The engine must not be run out of water without providing proper cooling to the exhaust system. Maximum engine run time out of water is 2 minutes. Failure to do so may result in damage to the exhaust system and engine. Refer to *EXHAUST SYSTEM* subsection.**

In B.U.D.S., select the following:

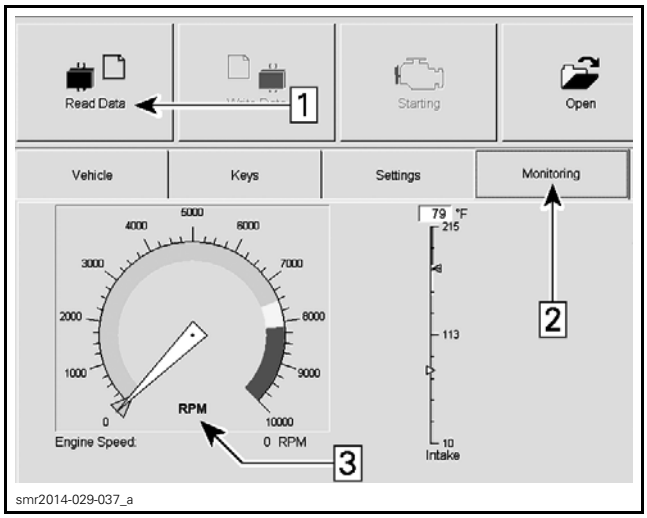

VERIFYING ENGINE RPM USING B.U.D.S.
Step 1: Click on the **Read Data button**
Step 2: Select the **Monitoring** *page tab*
Step 3: Read the engine **RPM** *indication*

As an alternate method, the engine RPM can be measured using the following procedure:

REQUIRED TOOL
DIGITAL INDUCTION TACHOMETER (P/N 529 014 500)

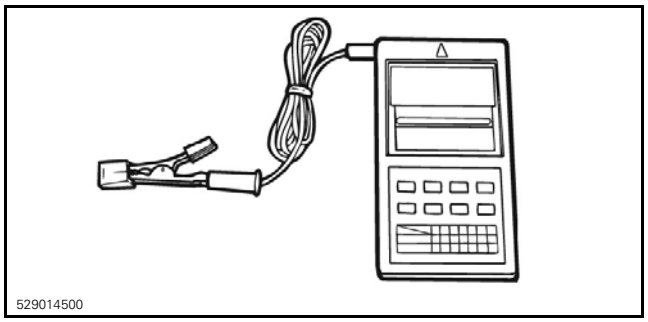

1. Wrap the tachometer's wire a few times around the protruding part of the ignition coil.

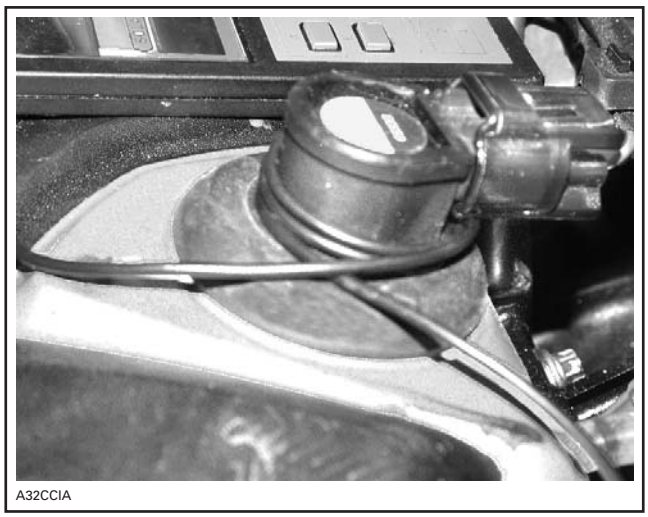

TYPICAL

2. Start engine.

NOTICE **The engine must not be run out of water without providing proper cooling to the exhaust system. Maximum engine run time out of water is 2 minutes. Failure to do so may result in damage to the exhaust system and engine. Refer to *EXHAUST SYSTEM* subsection.**

3. Read the engine RPM on the induction tachometer.

NOTE: If idle speed is not within specifications, check if there is any occurred or active fault code(s) using B.U.D.S.. Follow recommend service actions.

CLOSED THROTTLE RESET

General Information

This operation performs a reset of the TPS values of the throttle body in the ECM.

The Closed throttle Reset must be carried out only when:

– Replacing the throttle body.
– Replacing the ECM.

Closed Throttle Reset Procedure

1. Use the B.U.D.S. software to perform this setting. Refer to *COMMUNICATION TOOLS AND B.U.D.S.* subsection.
2. Press the START/STOP button to wake up the ECM.
3. Install the tether cord on the engine cut-off switch.
4. Ensure throttle lever is completely released.
5. In B.U.D.S., select:
   – **Read Data** button
   – **Setting** page tab
   – **ECM** page
   – **Reset** button.

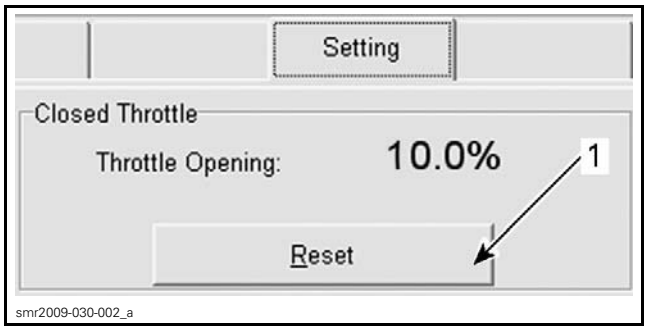

ECM SETTING PAGE IN B.U.D.S.
1. Click Reset button

The following message will confirm the operation.

Reset is completed.

NOTE: It is not necessary to click on the Write button in B.U.D.S.

Exit B.U.D.S.

NOTE: If the throttle valve was not within the allowed range when the Closed Throttle Reset was carried out, no error message would be displayed. However, a fault code would be set when the engine is started.

6. Start engine and make sure it operates normally through its full engine RPM range.

NOTICE **The engine must not be run out of water without providing proper cooling to the exhaust system. Maximum engine run time out of water is 2 minutes. Failure to do so may result in damage to the exhaust system and engine. Refer to *EXHAUST SYSTEM* subsection.**

7. Check for fault codes using B.U.D.S. If a fault code related to the throttle actuator appears, clear it, then carry out another Closed Throttle Reset procedure. To clear faults, refer to *DIAGNOSTIC AND FAULT CODES* subsection.

TROUBLESHOOTING

DIAGNOSTIC TIPS

Engine problems are not necessarily related to the fuel injection system.

It is important to ensure that the engine and propulsion system, fuel delivery and electrical systems are functioning normally.

For diagnostics purposes, use B.U.D.S. software. See *COMMUNICATION TOOLS AND B.U.D.S.* subsection.

After a problem has been solved, be sure to clear the fault(s) recorded in the ECM using the B.U.D.S. software.

⚠ WARNING

Electrical actuators and electronic modules may be powered up as soon as the START/STOP button is depressed. Always disconnect the battery prior to disconnecting any electrical or electronic parts.

Never use a battery charger to temporarily substitute the battery as it may cause the ECM to function erratically, or not at all.

Check related-circuit fuse solidity and condition with an ohmmeter. A visual inspection could lead to a false diagnosis.

Poor Idling

If poor idling is experienced, check the following:
- Poor quality fuel or water in the fuel
- Fault codes using B.U.D.S.
- Throttle body and flame arrestor cleanliness
- Engine leaks or other mechanical problem.

Electrical Related Problems

It is important to check the following in the electrical system:
- Battery voltage
- Fuses
- Ground connections
- Wiring and connectors.

Ensure that all electronic components are original BRP recommended components. Any modification to the wiring harness may lead to poor system operation or generate fault codes.

Electrical Connections

Pay particular attention to ensure that terminals and pins are not out of their connectors, corroded, or out of shape.

When probing terminals, pay attention not to deform the terminals as this could cause a loose or intermittent connection that would be difficult to troubleshoot.

NOTE: Do not apply dielectric grease or other lubricants on the ECM connectors and on the starter relay connector.

PROCEDURES

ENGINE CONTROL MODULE (ECM)

NOTE: As a first troubleshooting step, always check for applicable fault codes using B.U.D.S. software.

ECM Location

The ECM is located on top of the air intake silencer.

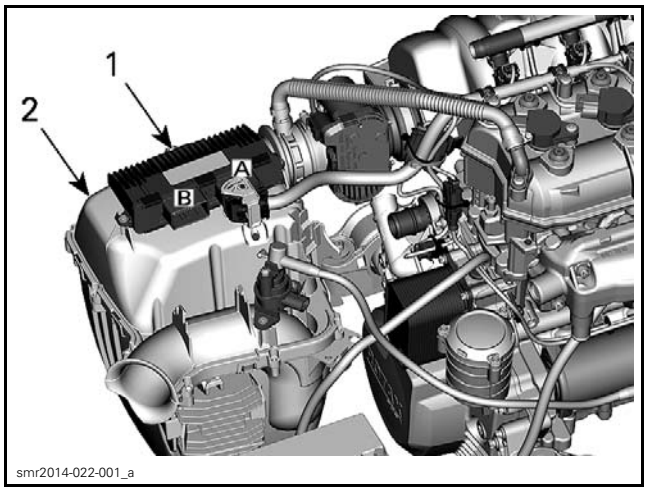

1. *ECM*
2. *Air intake silencer*

A. *Connector "A"*
B. *Connector "B"*

ECM Connector Identification

There are 2 connectors connected to the ECM:

– Engine harness connected to ECM-A
– Vehicle system control harness connected to ECM-B.

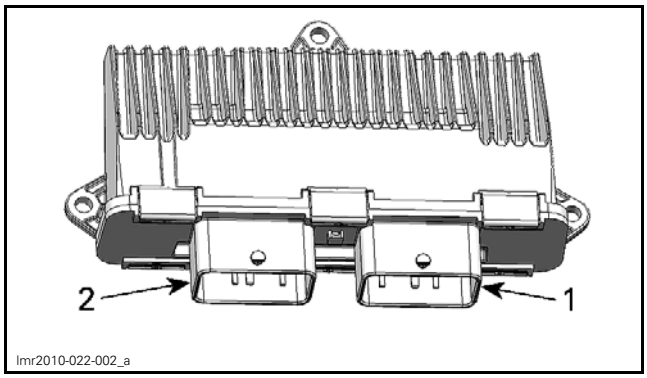

ECM CONNECTOR IDENTIFICATION - COOLING FINS FACING OUT
1. *Connector A*
2. *Connector B*

The ECM connectors have 48 pins.

NOTE: For connector information, cleaning and probing, refer to *CONNECTOR INFORMATION* subsection.

ECM Connector Access

Limited access to the ECM connectors is obtained by removing the LH access cover. The ECM harnesses are firmly secured with multiple locking ties which make the connectors (especially ECM-A) and the locking ties extremely difficult to work with.

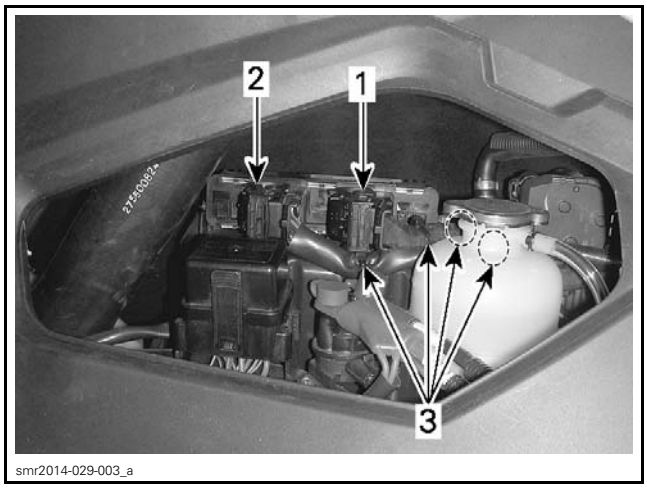

1. *ECM-A*
2. *ECM-B*
3. *Locking ties*

For ease of access, remove the central body. Refer to *BODY* subsection.

ECM Power Circuit Diagram

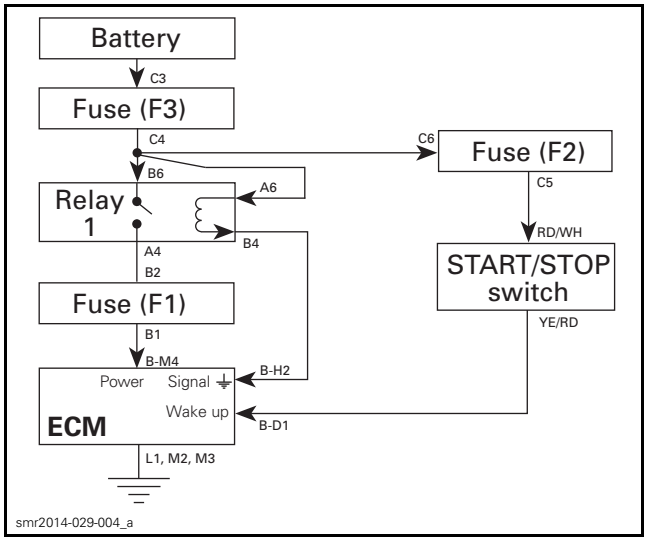

ECM Power Circuit Validation

Briefly press START/STOP button.

This should wake up the ECM . The ECM will then activate relay 1 which will turn ON all power. After approximately 12 seconds, the multifunction gauge indications will go out if the tether cord is not installed, and all electrical power will be turned off after approximately 3 minutes.

If the tether cord is installed when the START/STOP button is pressed, the multifunction gauge and electrical power will stay on for approximately 3 minutes if the START/STOP button is not pressed again, or if the engine is not started.

QUICK INDICATION THAT ECM IS POWERED (ASSUMING THE OBSERVED COMPONENT IS WORKING)
Multifunction gauge comes ON.
Fuel pump turns on for approx. 2 seconds (if tether cord installed).

If ECM does not turn on, check the following:
- Fuse F1, F2 and F3.
- Battery voltage. Refer to *CHARGING SYSTEM* subsection.
- Relay R1.
- START/STOP switch. Refer to *STARTING SYSTEM* subsection.
- ECM power circuit wires and ground wires.

For testing of fuses and relay R1, refer to *POWER DISTRIBUTION AND GROUNDS* subsection.

NOTE: When relay 1 is not working, the EMS (engine management system) and the complete vehicle electrical system will not be powered.

ECM Wake Up Logic

With Tether Cord Installed

When the START/STOP button is pressed to start engine:
- ECM pin B-D1 receives current from battery via the START/STOP switch. ECM is woken up.
- ECM pin B-H2 provides a ground to the relay coil in fuse box.
- The relay contacts close and provide main 12 Vdc power to the ECM at pin B-M4.
- The relay also powers the other components in the electrical system.
- ECM pin B-E4 monitors for a tether cord installed on the engine cut-off switch.
- When the tether cord is installed on the engine cut-off switch, it completes a circuit that provides a ground to the ECM, pin B-F2. This tells the ECM the tether cord is installed and the engine can be started. If the engine is not started, the power will be turned off after approximately 3 minutes.

Without a Tether Cord Installed

When the START/STOP button is pressed:
- The multifunction gauge turns on, goes through the self-test function, displays applicable messages and turns off a few seconds later.
- The engine cannot be cranked.
- The ECM stays powered up until it removes the ground to the relay coil after 3 minutes (pin B-H2).
- Relay contacts open and power to the ECM is removed.
- Power is also removed on all other electrical systems.

Test for Electrical System Power After Multifunction Gauge Shutdown

1. Remove LH access cover.
2. Remove fuse box cover.
3. Using a multimeter set to Vdc, check for power at the contacts on top of the ACC 10A fuse (F1).

REQUIRED TOOL
FLUKE 115 MULTIMETER (P/N 529 035 868)

529035868

MULTIMETER PROBES		READING	CONDITION
Fuse F1 contacts	Battery ground	Battery voltage	Power is ON
		No voltage	Power is OFF

ECM Shut Down Logic

When the engine is stopped by using the START/STOP button or by removing the tether cord from the engine cut-off switch, the following occurs:
- ECM stops the engine.
- After a few seconds, the multifunction gauge turns off.
- After 60 seconds, ECM (pin B-H2) removes the ground to the relay coil.
- Relay contacts open and power to the ECM is removed.
- Power is also removed on all other electrical systems.

ECM Wake Up Circuit Test

1. Disconnect ECM-B connector, refer to *ECM CONNECTOR ACCESS* in this subsection.
2. Install ECM-B connector on the ECM adapter tool.

REQUIRED TOOL	
ECM ADAPTER TOOL (P/N 529 036 166)	

3. Use a multimeter and select Vdc.
4. While pressing START/STOP button, read voltage as follows.

ECM ADAPTER	BATTERY	MEASUREMENT
D1	Battery ground	Battery voltage

If voltage is as per specification, refer to *ECM POWER CIRCUIT TEST*.

If voltage is out of specification:

– Test the START/STOP switch, refer to *STARTING SYSTEM* subsection.
– If START/STOP switch tests good, test wiring and connectors from battery to ECM. Refer to *WIRING DIAGRAM*.

ECM Power Circuit Test

1. Connect ECM connector "B" on the ECM adapter tool.

ECM ADAPTER TOOL (P/N 529 036 166)	

2. Install an appropriate fused jumper wire between the following terminals on the ECM adapter tool.

JUMPER WIRE COORDINATES ON ECM ADAPTER	
H2	M2, M3 or L1

NOTE: When the jumper is installed, the multifunction gauge should come on.

If the multifunction gauge did not come on, check the following:

– Fuses F1, F2 and F3
– Relay 1
– Wiring between ECM-B contact 2H and fuse F3, refer to the *WIRING DIAGRAM* subsection
– ECM ground circuit, refer to *CONTINUITY TEST OF ECM GROUND CIRCUITS* in this subsection.

For testing of fuses and relay R1, refer to *POWER DISTRIBUTION AND GROUNDS* subsection.

If gauge came on, carry on with the following step.

3. Use the FLUKE 115 MULTIMETER (P/N 529 035 868) and select Vdc.
4. Check for voltage as follows.

ECM ADAPTER	BATTERY	VOLTAGE
B-4M	Negative post	Battery voltage

If voltage is not measured, check the wiring and connections between ECM and junction JT-1 VT/GY, refer to the *WIRING DIAGRAM* subsection.

If all items mentioned in this test and in *ECM WAKE UP CIRCUIT TEST* tested good, try a new ECM.

Continuity Test of ECM Ground Circuits

1. Connect ECM-B connector on the ECM adapter tool.

REQUIRED TOOL	
ECM ADAPTER TOOL (P/N 529 036 166)	

2. Using the FLUKE 115 MULTIMETER (P/N 529 035 868) set to Ω, probe adapter terminals as per following table.

ECM ADAPTER	BATTERY POST	RESISTANCE
Pins L1, M2 and M3	Ground	Close to 0 Ω (continuity)

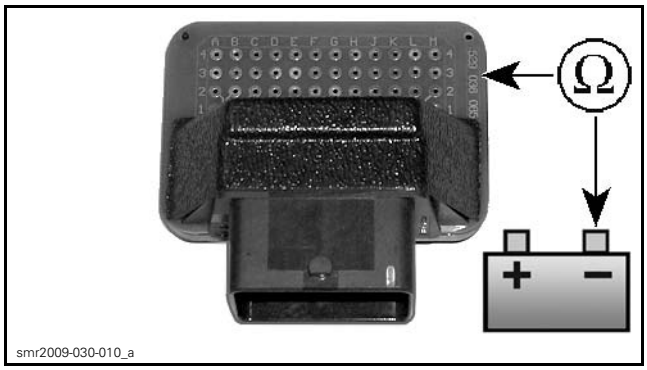

If any measurement is out of specification refer to *POWER DISTRIBUTION AND GROUNDS* subsection and check the following:

– Wiring and connections
– Engine grounds
– Battery ground.

ECM Removal

NOTE: If a new ECM is to be installed, first read the procedures in *ECM REPLACEMENT* in this subsection.

1. Disconnect battery cables.

NOTICE **Always disconnect the BLACK negative (–) battery cable first, then disconnect RED positive (+) cable.**

2. Refer to *BODY* subsection and remove the central body.
3. Disconnect both ECM connectors from ECM.
4. Remove ECM retaining screws and remove the ECM from the air intake silencer.

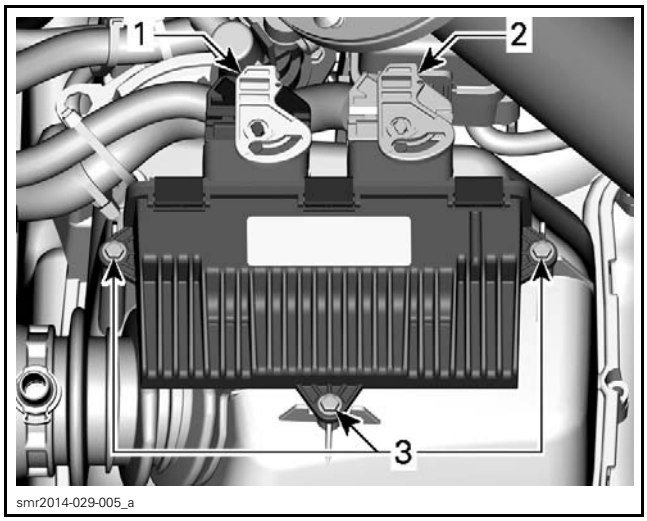

TYPICAL - ECM REMOVAL
1. ECM-A connector
2. ECM-B connector
3. ECM retaining screws

ECM Installation

1. Reverse removal procedure however, pay attention to the following.

ECM SCREW TIGHTENING TORQUE
2 N•m ± 0.5 N•m (18 lbf•**in** ± 4 lbf•**in**)

2. Reconnect ECM connectors.
3. Reconnect battery cables.

⚠ WARNING

Always reconnect the RED positive (+) battery cable first, then reconnect BLACK negative (–) cable.

4. If a new ECM is installed, refer to *ECM REPLACEMENT* in this subsection.

NOTICE **Always replace ECM by the same part number or by a BRP approved equivalent.**

ECM Replacement

NOTE: Prior to replacing an ECM, ensure that all the recommendations in the general introduction of this subsection have been followed and all applicable testing procedures have been carried out.

When installing a new ECM, data must be entered and a reset is required.

To transfer/enter data to the new ECM, there are 2 possible methods.

– If the faulty ECM can be read with B.U.D.S., refer to *ECM AUTOMATED DATA TRANSFER*.
– If the faulty ECM cannot be read with B.U.D.S., refer to *ECM MANUAL DATA ENTRY*.

ECM Automated Data Transfer

To transfer the information recorded in the faulty ECM to the new ECM, carry out the following.

1. Connect the watercraft to the latest applicable B.U.D.S. software version. Refer to *COMMUNICATION TOOLS AND B.U.D.S. SOFTWARE* subsection.
2. Press the START/STOP button to wake up the old ECM.
3. Install the tether cord on the engine cut-off switch.
4. In B.U.D.S., click the **Read Data** button to upload the information from the faulty ECM into B.U.D.S.

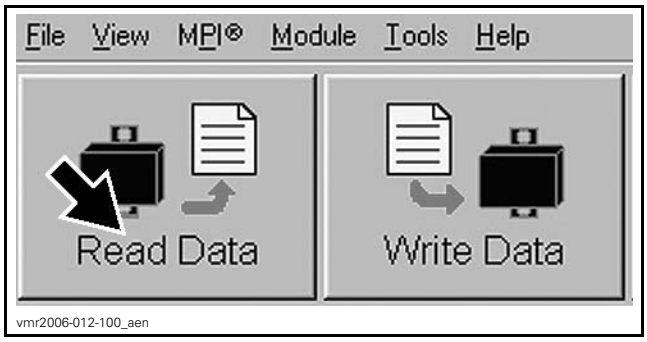

5. Keep B.U.D.S. running while replacing ECMs. The data will remain stored in the PC computer as long as B.U.DS. is running.
6. Remove the old ECM. Refer to *ECM REMOVAL* in this subsection.
7. Install and connect the new ECM. Refer to *ECM INSTALLATION* in this subsection.
8. Briefly press the START/STOP button to wake up the new ECM. **Engine must not crank.**
9. From the **Module** menu at the top of the B.U.D.S. page, choose **ECM**, then **Replace**

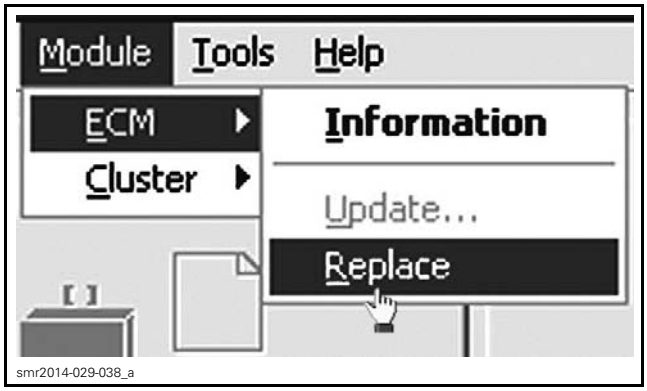

B.U.D.S. will automatically write the data from the PC computer into the new ECM.

Then, B.U.D.S. will display the following message.

10. Remove the tether cord from the engine cut-off switch.
11. Wait until the message disappears in B.U.D.S. so that all data is written into the new ECM.

NOTE: The message will disappear approximately 3 minutes after the tether cord has been removed.

12. Perform the **Closed throttle** reset. Refer to **Closed Throttle Reset** in *ADJUSTMENTS* in this subsection.
13. Reinstall remaining removed parts.

ECM Manual Data Entry for ECM Replacement

Use one of the following 2 methods to collect the required information. The 1st being the easiest:

1. Use B.U.D.S. to obtain the data from a saved .mpem file on your PC computer.
2. Collect the information from the vehicle and BOSSWeb.

Once the required information has been collected, refer to *ENTERING THE COLLECTED INFORMATION INTO THE ECM*.

1st Collecting Method: Obtaining the Data from a Saved .mpem File

1. Start B.U.D.S.

NOTE: It is not necessary to perform any connection. The PC computer can be used alone.

2. In B.U.D.S., click on the **Open** button.

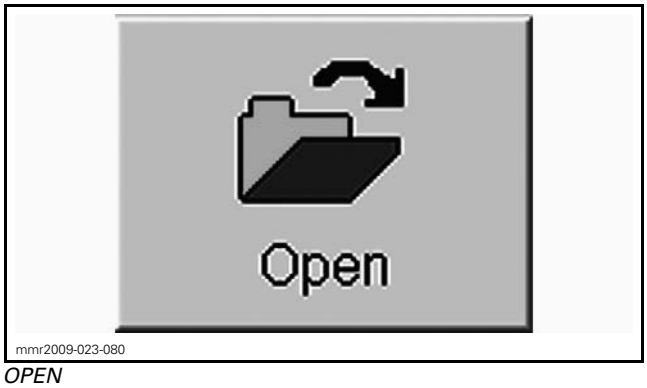

OPEN

3. Click once on the **Folder Up** button in the Open box.

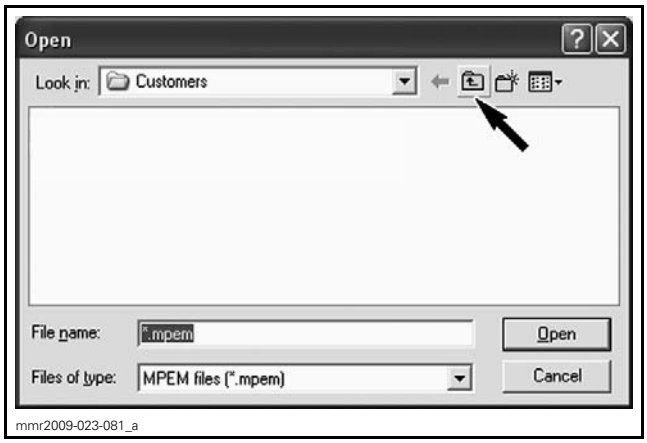

OPEN

Double click on the **AutoSave** folder.

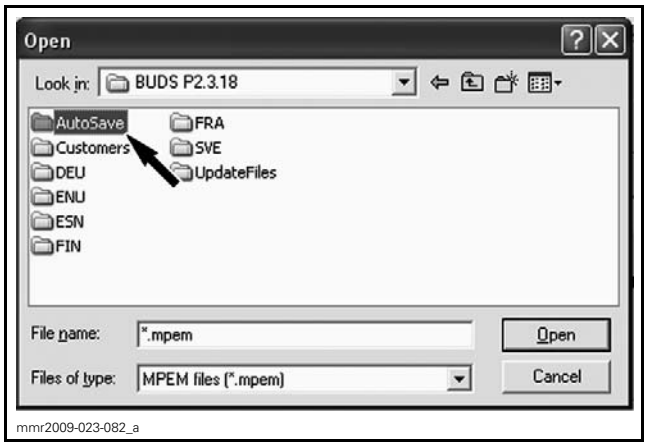

mmr2009-023-082_a

NOTE: You may have to go to another **AutoSave** folder from a previous version of B.U.D.S.

4. Choose the latest file saved for this specific vehicle.

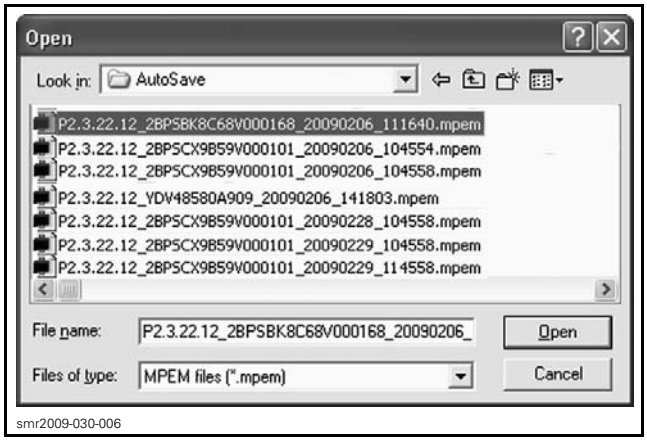

smr2009-030-006

IMPORTANT: Be sure to use the file that specifically matches the vehicle you are servicing.

NOTE: The file name structure is as follows:
B.U.D.S. version_VIN_date read (yyyymmdd)_hour read (hhmmss).mpem
Example: **P2.3.22.12_2BPSBK8C68V000168_20090206_111640.mpem** Therefore: B.U.D.S. version: P2.3.22.12 VIN: 2BPSBK8C68V000168 Date: 2009 02 06 Hour: 11h 16m 40s

5. Select the **Vehicle** page tab and record (write down) the following information.
   1. Vehicle serial number
   2. Engine serial number (without the leading "M")
   3. Vehicle model number
   4. Customer name.

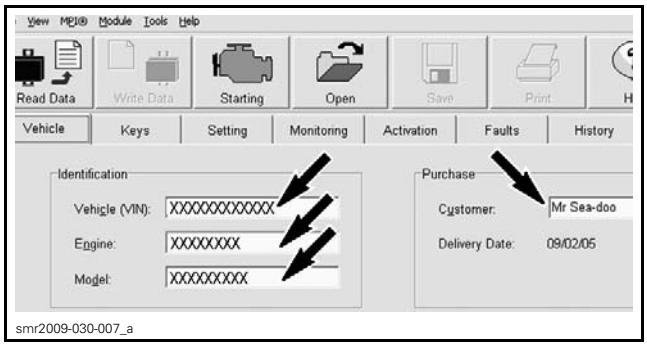

smr2009-030-007_a

VEHICLE TAB

6. Enter recorded data in ECM as detailed in *ENTERING THE COLLECTED INFORMATION INTO THE ECM*.

2nd Collecting Method: Collect the Information from the Vehicle and BOSSWeb

1. Record engine serial number.

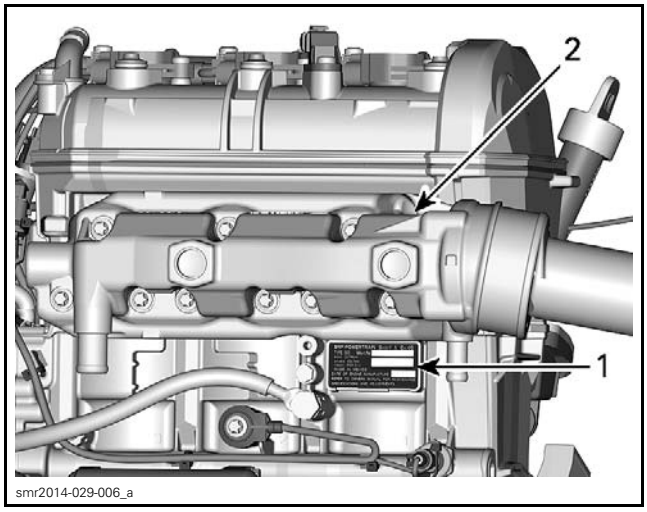

smr2014-029-006_a

LH SIDE OF ENGINE
1. Engine serial number plate
2. Exhaust manifold

2. Record the following numbers from BOSSWeb. Look in **Sales** menu and choose **Unit history**.
   1. Vehicle serial number
   2. Vehicle model number
   3. Customer name.

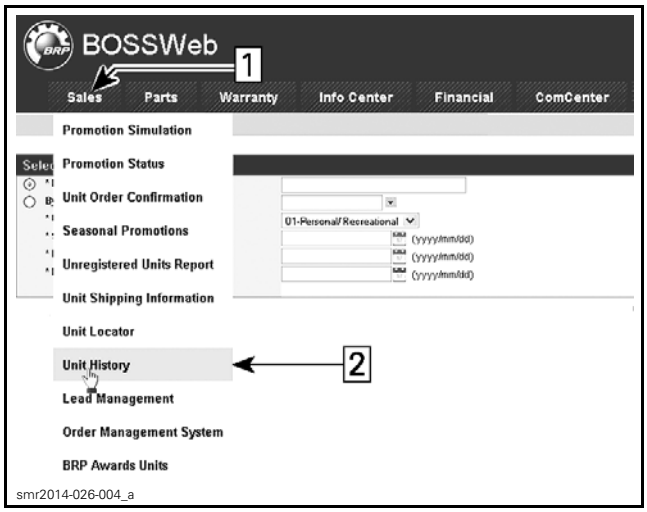

SERVICE, UNIT HISTORY
1. *Click on* SALES *menu*
2. *Select* Unit History

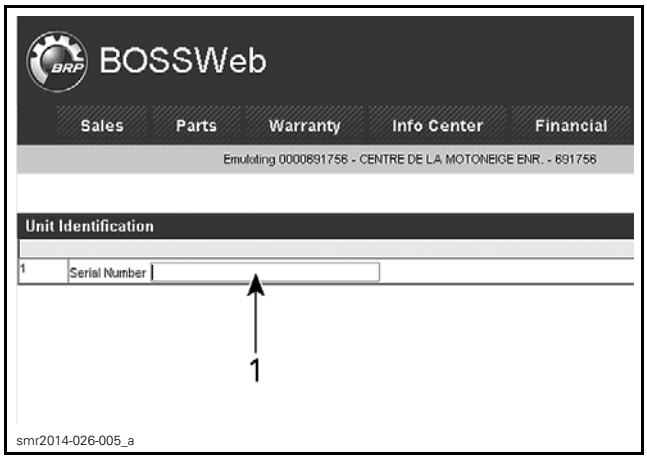

1. *Vehicle Serial Number here*

3. Enter the recorded data in the new ECM as detailed in *ENTERING THE COLLECTED INFORMATION INTO THE ECM*.

Entering the Collected Information Into the ECM

1. Connect the vehicle to B.U.D.S.. Refer to *COMMUNICATION TOOLS AND B.U.D.S.* subsection.
2. In B.U.D.S., click the **Read Data** button to read the new ECM.

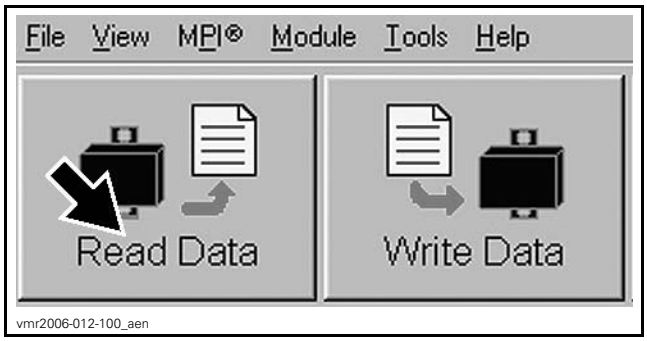

The following screen window will pop up.

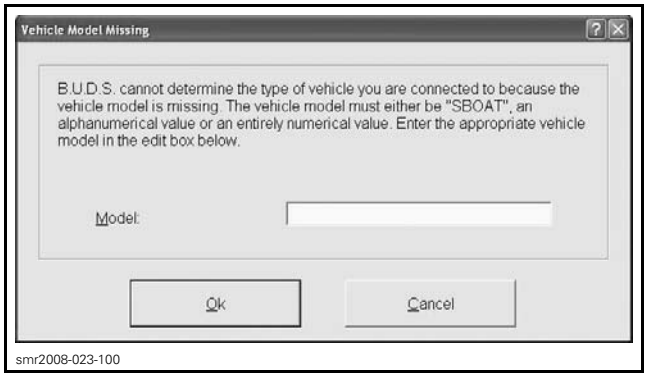

3. Enter the vehicle model number.

NOTICE **Do not enter SBOAT for a PWC. Enter only the appropriate product model number as obtained when gathering the information.**

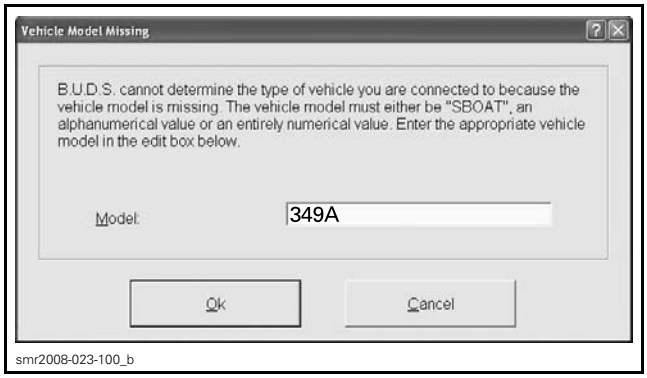

TYPICAL

4. Click **Ok** once the required data has been entered.
5. The following message will appear on B.U.D.S. screen.

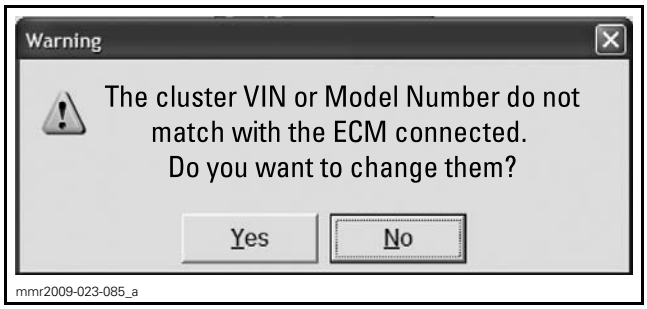

6. Click **Yes** to match ECM and gauge.
7. The serial numbers are purposely missing as seen in B.U.D.S. Click the arrows indicated in the following illustration to transfer the gauge numbers into the ECM.

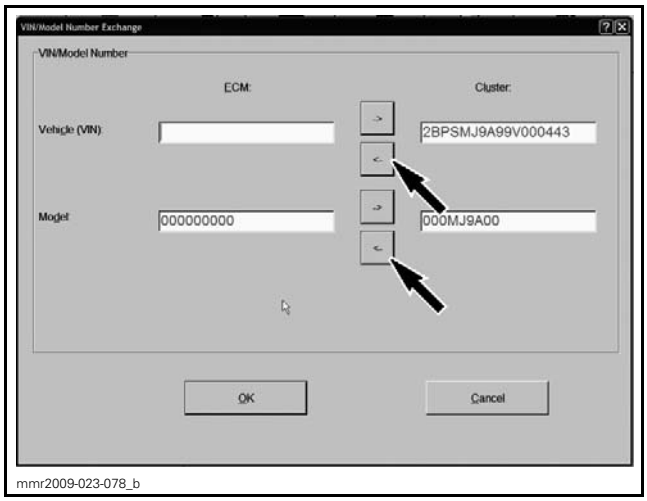

mmr2009-023-078_b

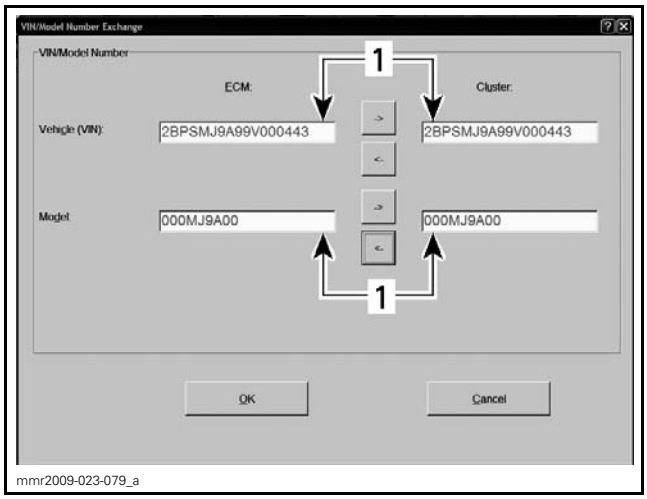

mmr2009-023-079_a

1. *Matching numbers*

8. Click the **OK** button to complete the procedure.
9. Select the **Vehicle** page tab and ensure all of the following information you recorded previously is precisely entered in the new ECM.
   1. Vehicle serial number (VIN)
   2. Engine serial number (do not enter the "M" at the beginning of the engine number)
   3. Vehicle model number
   4. Customer name.

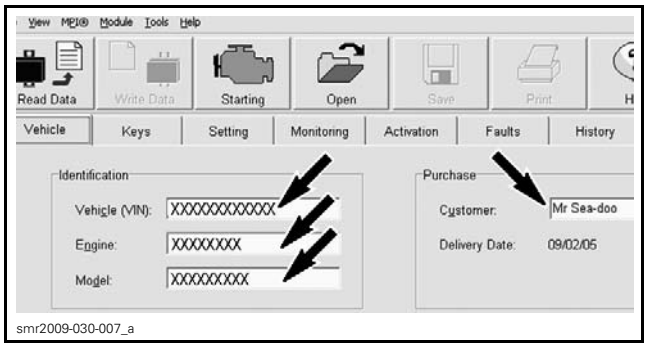

smr2009-030-007_a

VEHICLE TAB

10. Enter all missing information.

NOTICE Pay particular attention when typing the V.I.N. and model numbers. Once **Write Data** button is pressed, the data cannot be modified.

11. Click on the following tabs:
    - History
    - Part Replacement
    - Add Part in History.
12. Enter the **old** ECM serial number in the **Add Part In History** window.

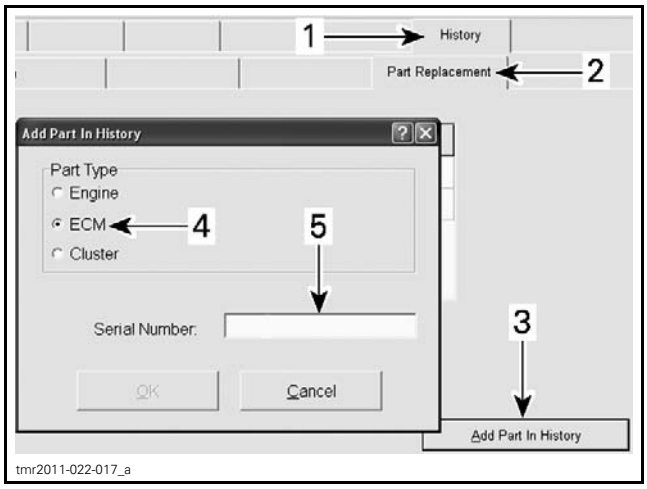

tmr2011-022-017_a

TYPICAL - ADDING PART IN HISTORY
1. **History** *page tab*
2. **Part Replacement** *tab*
3. **Add part in history** *button*
4. **ECM** *selection*
5. *Add ECM serial number here*

NOTE: The ECM serial number can be found on the ECM sticker that also identifies the part number.

13. Click on the **OK** button.
14. Click on the **Write Data** button.

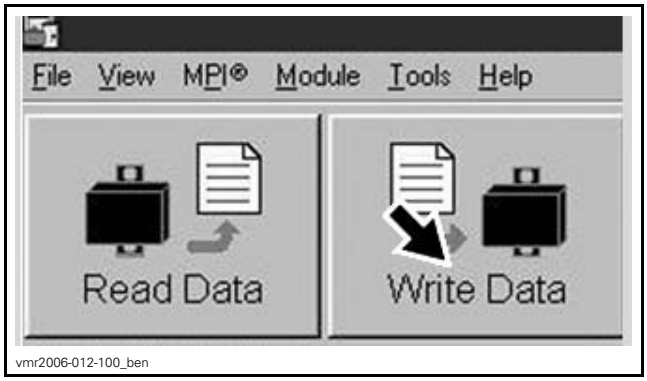

vmr2006-012-100_ben

15. Perform the *CLOSED THROTTLE RESET* procedure, refer to *ADJUSTMENTS* in this subsection.
16. Start the engine and ensure proper operation.

NOTICE **The engine must not be run out of water without providing proper cooling to the exhaust system. Maximum engine run time out of water is 2 minutes. Failure to do so may result in damage to the exhaust system and engine. Refer to *EXHAUST SYSTEM* subsection.**

17. Reinstall any remaining removed parts.

FUEL RAIL

Fuel Rail Removal

Disconnect battery, refer to *POWER DISTRIBUTION AND GROUNDS*.

Remove central body. Refer to *BODY* subsection.

Fuel Rail Hose Disconnection

1. Place an absorbent shop rag around the fuel supply hose fitting at the fuel rail to catch any fuel leakage.
2. Disconnect fuel hose from fuel rail.

REQUIRED TOOL
FUEL HOSE DISCONNECT TOOL (P/N 529 036 037)

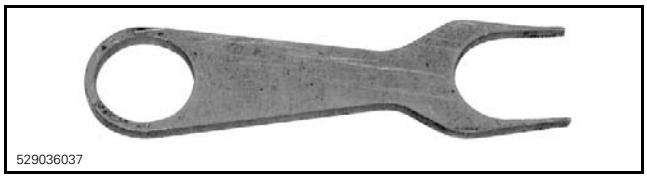
529036037

lmr2006-008-010

NOTE: It may be necessary to rotate fuel hose fitting to align the tool ends with the openings of the locking mechanism.

Fuel Rail Removal

1. Disconnect all injector connectors.
2. Remove screws retaining the fuel rail.

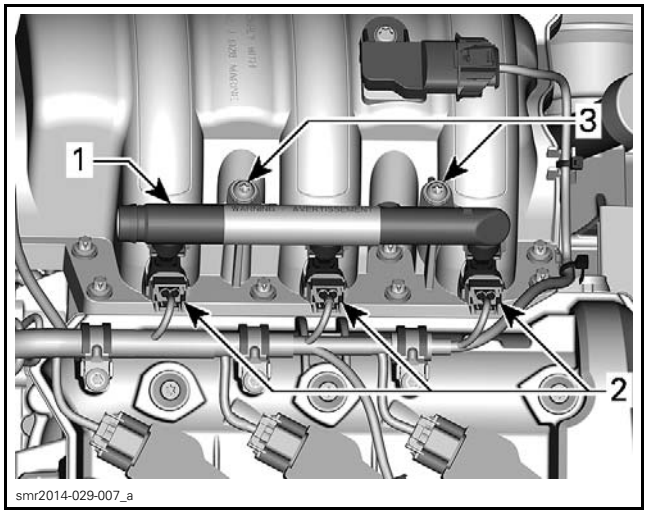

smr2014-029-007_a

1. *Fuel rail*
2. *Fuel injector connectors*
3. *Retaining screws*

3. Gently wiggle fuel rail side to side as you pull the fuel rail out with fuel injectors.

Fuel Rail Installation

Reverse the removal procedure. However, pay attention to the following.

FUEL RAIL INSTALLATION	
INJECTOR O-RINGS	SERVICE PRODUCT
	APPLY ENGINE OIL ON O-RING
RETAINING SCREWS	TORQUE
	9 N•m ± 1 N•m (80 lbf•**in** ± 9 lbf•**in**)

Fuel Rail Hose Connection

FUEL RAIL HOSE CONNECTION	
FUEL HOSE O-RINGS	SERVICE PRODUCT
	ENGINE OIL

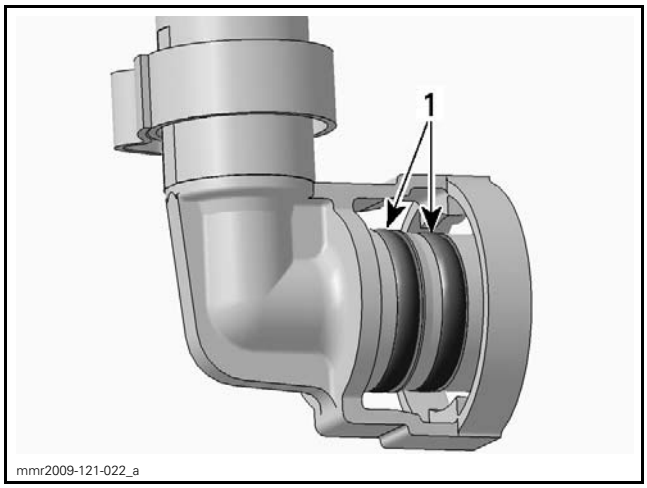

1. Apply oil on O-rings

1. Connect fuel hose to fuel rail.

IMPORTANT: Push fuel hose fitting on fuel rail until you hear a "click". Try pulling fuel hose off fuel rail to ensure fitting is properly locked.

2. Pressurize the fuel system and check for a fuel leak. Refer to *FUEL SYSTEM HIGH PRESSURE LEAK TEST* in *FUEL TANK AND FUEL PUMP* subsection.

⚠ WARNING

Failure to pressurize the fuel system may result in severe injury or a life threatening situation should a leak occur.

3. Reinstall all remaining removed parts.

FUEL INJECTOR

Fuel Injector Access

Remove central body, refer to *BODY* subsection.

Fuel Injector Operation Test with B.U.D.S. (Dynamic)

1. Connect watercraft to B.U.D.S. software. Refer to *COMMUNICATION TOOLS AND B.U.D.S.*
2. Start engine.

NOTICE **The engine must not be run out of water without providing proper cooling to the exhaust system. Maximum engine run time out of water is 2 minutes. Failure to do so may result in damage to the exhaust system and engine. Refer to *EXHAUST SYSTEM* subsection.**

3. In B.U.D.S., click the following:
   – **Read Data** button
   – **Monitoring** tab.
4. Using the B.U.D.S. software, shut down each engine cylinder one at a time by clicking on the button under the applicable cylinder.

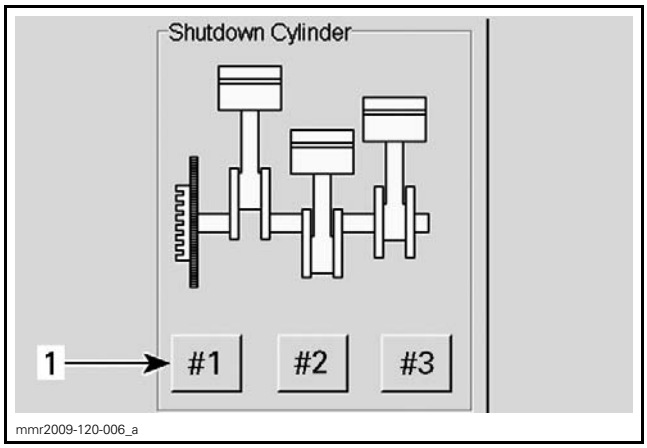

MONITORING AND ECM TABS
1. Click on cylinder number to be tested

If the engine RPM drops when clicking on a cylinder, the injector and the ignition of this cylinder are functioning normally.

If the engine RPM does not drop when clicking on a cylinder, this cylinder is not functioning properly. Check the following:

– Fuel injector operation. Refer to *FUEL INJECTOR OPERATION TEST WITH B.U.D.S. (STATIC)*.
– Spark plug and ignition coil. Refer to *IGNITION SYSTEM*.
– Engine condition.

Fuel Injector Operation Test with B.U.D.S. (Static)

NOTICE **After fuel injector activation using B.U.D.S., always crank engine in drowned mode to ventilate engine and prevent a potential backfire due to fuel accumulation in the engine.**

1. Connect watercraft to B.U.D.S. software. Refer to *COMMUNICATION TOOLS AND B.U.D.S.*
2. Press the START/STOP button to wake up the ECM.
3. Install the tether cord on the engine cut-off switch.
4. In B.U.D.S., click the following:
   – **Read Data** button
   – **Activation** tab
   – **ECM** page.
5. In B.U.D.S., click on fuel injector to be tested

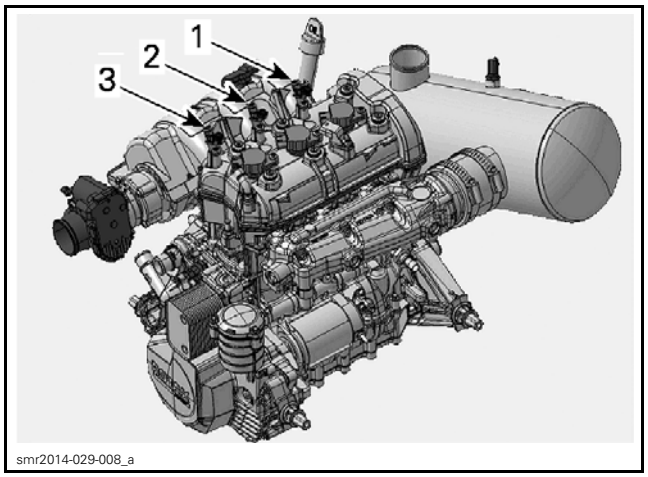

ACTIVATION AND ECM TABS
1. Click on injector no. 1 to activate
2. Click on injector no. 2 to activate
3. Click on injector no. 3 to activate

6. Listen for the injector activation.

If you can hear the injector, it validates its operation. Carry out the *FUEL INJECTOR BALANCE TEST*.

If you do not hear the injector, carry out the *INJECTOR INPUT VOLTAGE TEST*.

Fuel Injector Balance Test with B.U.D.S.

NOTICE **After fuel injector activation using B.U.D.S., always crank engine in drowned mode to ventilate engine and prevent a potential backfire due to fuel accumulation in engine.**

1. Install a fuel pressure gauge as described in *FUEL PUMP PRESSURE TEST* of *FUEL TANK AND FUEL PUMP* subsection.
2. Connect watercraft to B.U.D.S. software. Refer to *COMMUNICATION TOOLS AND B.U.D.S.*
3. Press the START/STOP button to wake up the ECM.
4. Install tether cord on engine cut-off switch.
5. In B.U.D.S., click the following:
   – **Read Data** button
   – **Activation** tab
   – **ECM** page.
6. In B.U.D.S., click the Fuel Pump button to activate fuel pump.

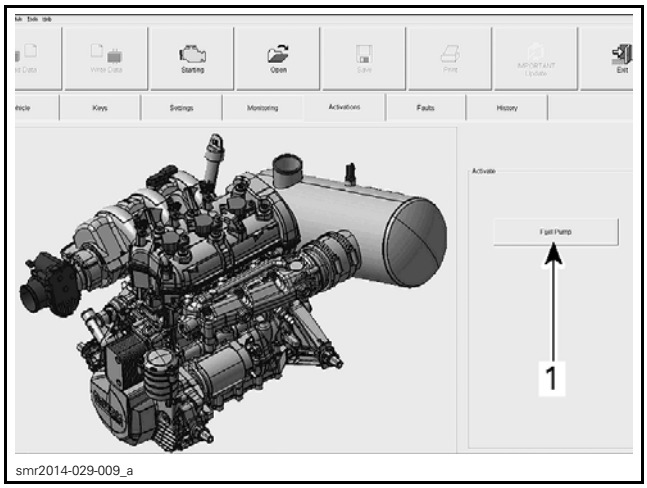

ACTIVATION AND ECM TABS
1. Fuel Pump activation button

7. Fuel pressure must be within specification. Refer to *FUEL TANK AND FUEL PUMP* subsection. Re-activate fuel pump as necessary.
8. In B.U.D.S., energize fuel injector **no. 1**.

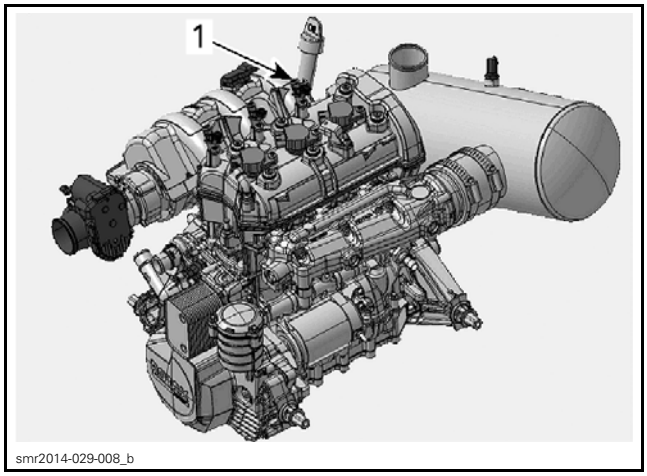

ACTIVATION AND ECM TABS
1. Click on injector no. 1 to activate

9. Record the fuel pressure drop for injector **no. 1**.
10. In B.U.D.S., click the Fuel Pump button to activate fuel pump.

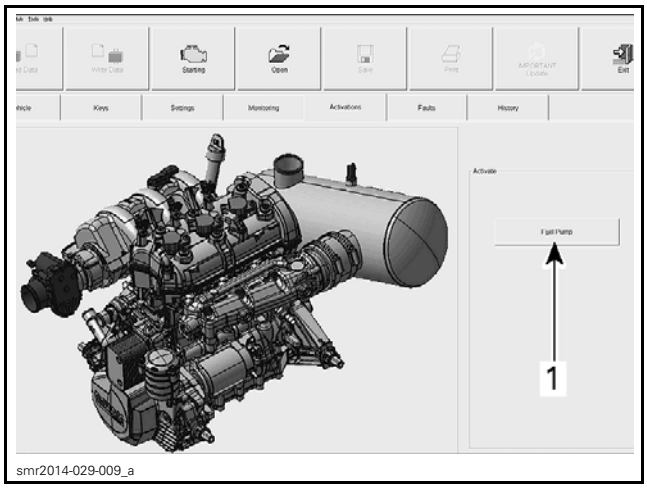

ACTIVATION AND ECM TABS
1. Fuel pump

11. Repeat the procedure for fuel injectors **no. 2** and **no. 3** and record the pressure drop for each injector.
12. The maximum fuel pressure drop between injectors should not exceed the following specification:

MAXIMUM FUEL PRESSURE DROP ALLOWED BETWEEN FUEL INJECTORS
10 kPa (1.5 PSI)

If pressure drop of any fuel injector is greater than the specification, replace that injector then repeat the test.

13. Using the valve on the fuel pressure gauge, release the pressure in the system (if so equipped).
14. Remove fuel pressure gauge and reinstall removed parts.

Fuel Injector Resistance Test (at Component)

1. Remove injector connector.
2. Check resistance value between injector pins as per followings table.

INJECTOR PIN		RESISTANCE @ 20°C (68°F)
1	2	11.4 - 12.6 Ω

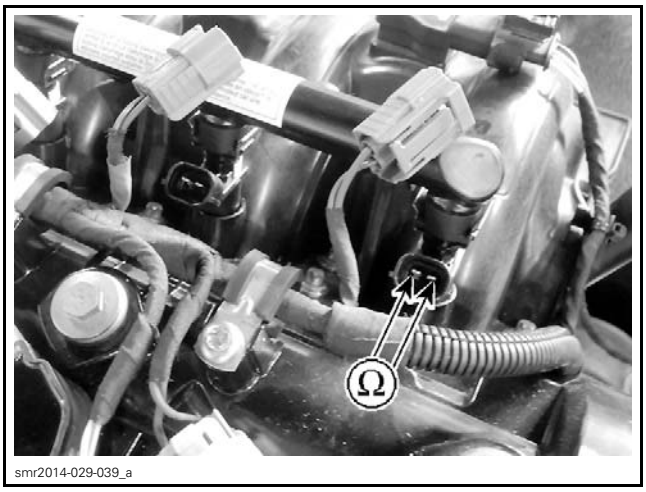

If readings are not as specified, replace injector.

If readings are as specified, repair or replace wiring and connectors from ECM to injector.

Fuel Injector Input Voltage Test

1. Disconnect fuel injector connectors.

NOTE: Press against tab underneath connector as illustrated to unlock it.

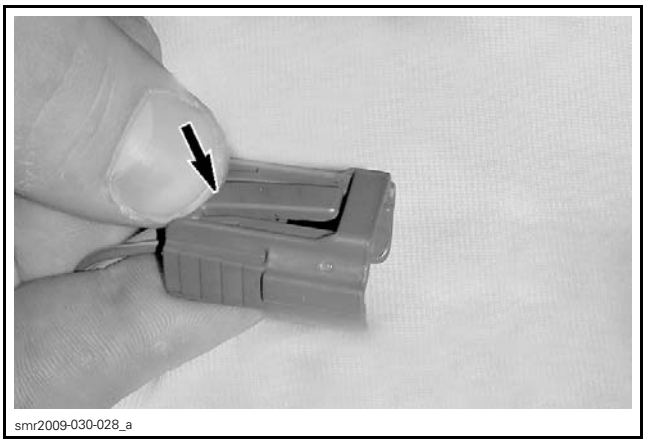

PRESS HERE TO UNLOCK

2. Press the START/STOP button to wake up the ECM.
3. Install tether cord on engine cut-off switch.
4. Use the FLUKE 115 MULTIMETER (P/N 529 035 868) and select Vdc.
5. Read input voltage to the applicable injector as per following table.

PROBE INJECTOR CONNECTOR	MEASUREMENT
VIOLET wire with a tracer to battery ground	Battery voltage

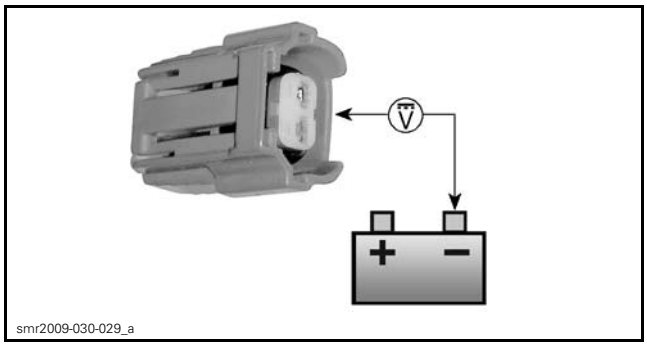

smr2009-030-029_a

If battery voltage is measured, carry out the *FUEL INJECTOR SIGNAL TEST*.

If battery voltage is not measured, check continuity between fuse box and injector. Refer to *WIRING DIAGRAM*.

Fuel Injector Signal Test

1. Connect vehicle to B.U.D.S. Refer to *COMMUNICATION TOOLS AND B.U.D.S.* subsection.
2. Press the START/STOP button to wake up the ECM.
3. Install the tether cord on the engine cut-off switch.
4. In B.U.D.S., select:
   – **Read Data** button
   – **Activation** tab.
5. Use the FLUKE 115 MULTIMETER (P/N 529 035 868) and set it to Vdc.

NOTE: Make sure multimeter is in the **Auto Range** mode.

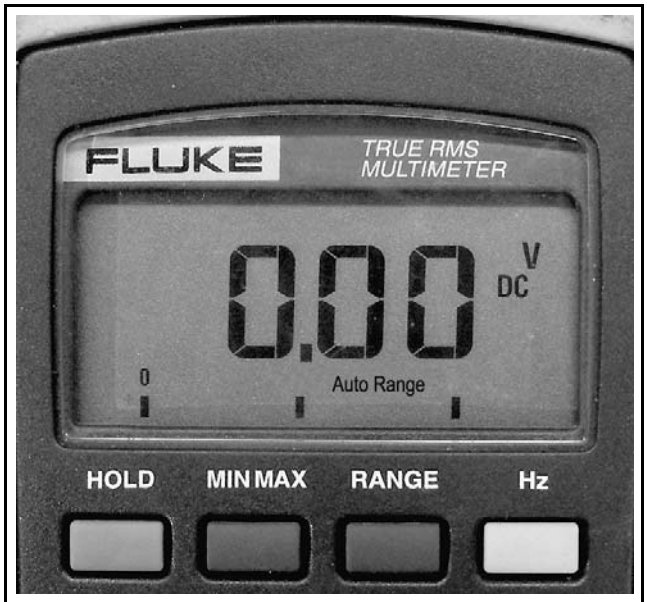

mmr2009-120-020_a

6. Press the **Hz** button so that the display shows Hz.

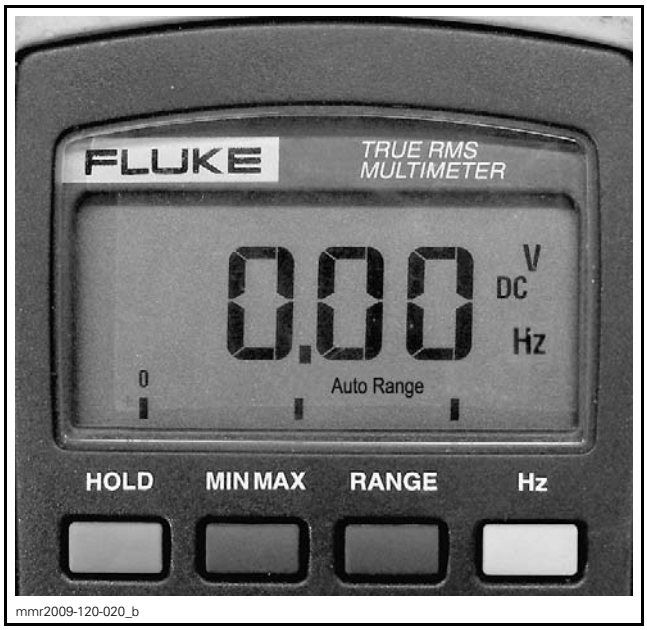

mmr2009-120-020_b

7. Connect the multimeter probes as indicated in the following table and using the B.U.D.S. software, activate each injector and read the frequency on the multimeter.

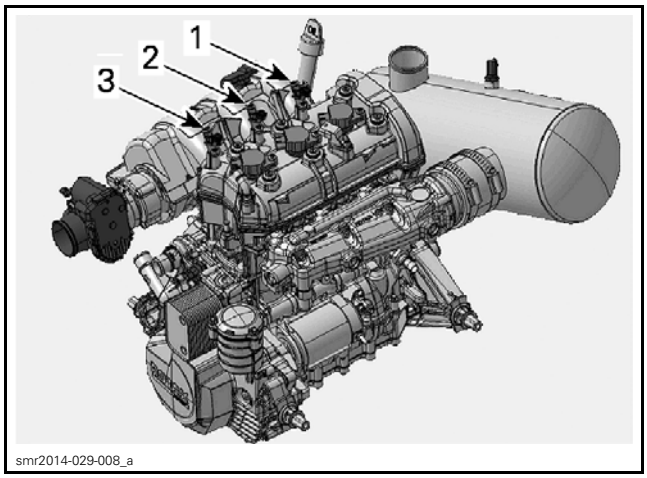

smr2014-029-008_a

INJECTOR ACTIVATION IN B.U.D.S.
1. Click on no. 1 injector to activate
2. Click on no. 2 injector to activate
3. Click on no. 3 injector to activate

NOTE: The multimeter counts the pulses per seconds (Hertz) of current the ECM sends to the injector.

INJECTOR	INJECTOR CONNECTOR CONTACT	BATTERY	MEASUREMENT
No. 1	BROWN/RED wire	Battery ground	Approximately 40 Hz
No. 2	BROWN/BLUE wire		
No. 3	BROWN/Gray wire		

If there is a frequency reading, the control circuit is functional.

If there is no reading, check continuity of control circuit (ECM to injectors). Refer to *WIRING DIAGRAM* for circuit details.

Fuel Injector Removal

1. Remove fuel rail and injectors as an assembly. Refer to *FUEL RAIL* in this subsection.
2. Remove the injector retaining clip.

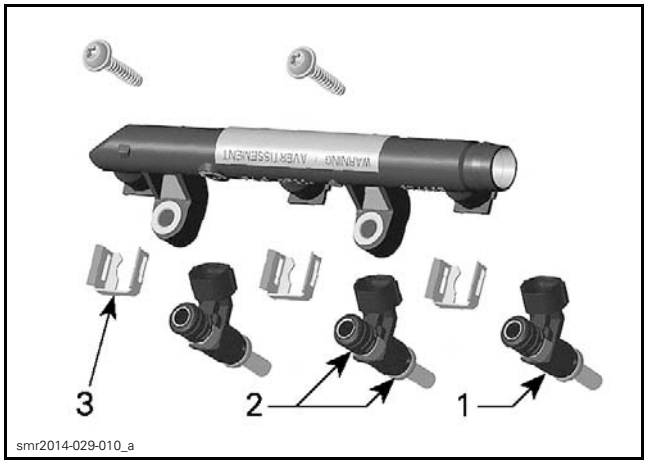

FUEL RAIL ASSEMBLY
1. Fuel injector
2. O-rings
3. Injector retaining clip

3. Pull the fuel injector out of the fuel rail and discard the O-rings..

Fuel Injector Installation

For the installation, reverse the removal procedure however, pay attention to the following details.

NOTICE **If installing the removed injector(s), always install NEW O-rings.**

1. Apply a thin film of engine oil to O-rings to prevent possible damage and to ease insertion in rail.
2. Install fuel injector with your hand. Do not use any tool.

FUEL INJECTOR INSTALLATION		
O-RINGS	New	Lubricate with engine oil

3. Ensure proper positioning of the intake manifold O-ring on injector as in following illustration.

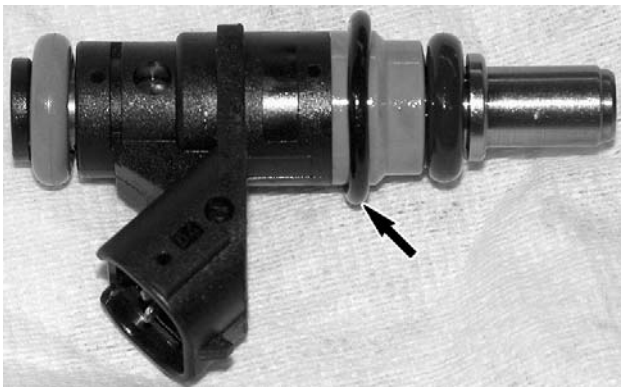

TYPICAL - INTAKE MANIFOLD O-RING POSITION

4. Carefully insert injector in air intake manifold paying attention to the manifold O-ring.

NOTICE **Gently push O-ring in evenly all around while inserting injector. O-ring must be completely inserted and not visible, before completing the insertion of the injector.**

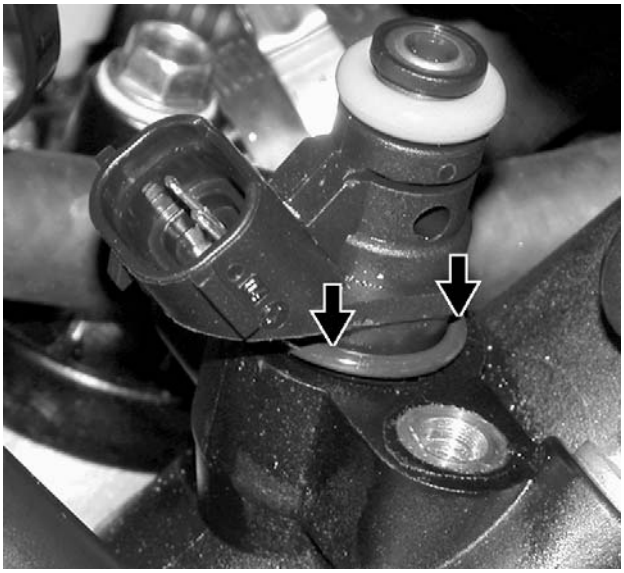

TYPICAL

5. Firmly push injector in until it bottoms out.
6. Install fuel rail on injectors. Refer to *FUEL RAIL INSTALLATION* in this subsection.

7. Apply engine oil on O-rings of fuel pressure hose fitting.

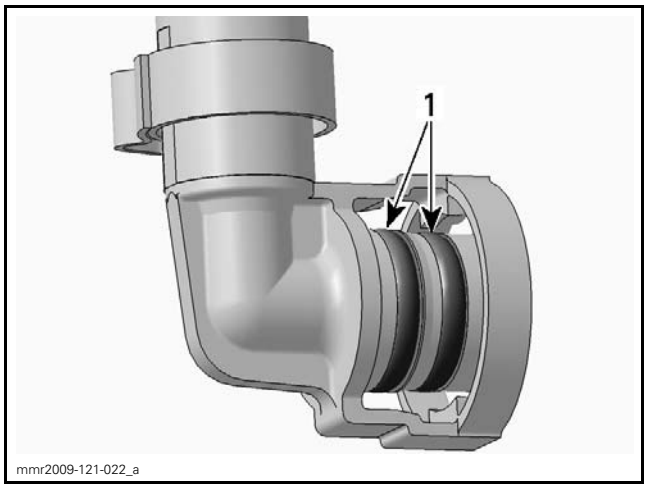

FUEL PRESSURE HOSE FITTING
1. Apply oil on O-rings

8. Connect fuel pressure hose to fuel rail.

IMPORTANT: Push fuel hose fitting on fuel rail until you hear a "click". Try pulling on fuel hose fitting to ensure it is properly locked.

Pressurize the fuel system and check for fuel leaks. Refer to *FUEL SYSTEM PRESSURIZATION* in *FUEL TANK AND FUEL PUMP* subsection.

⚠ WARNING

Failure to pressurize the fuel system and checking for fuel leaks may result in severe injury or a life threatening situation should a leak occur.

9. Reinstall all remaining removed parts.

THROTTLE BODY

Throttle Body Description

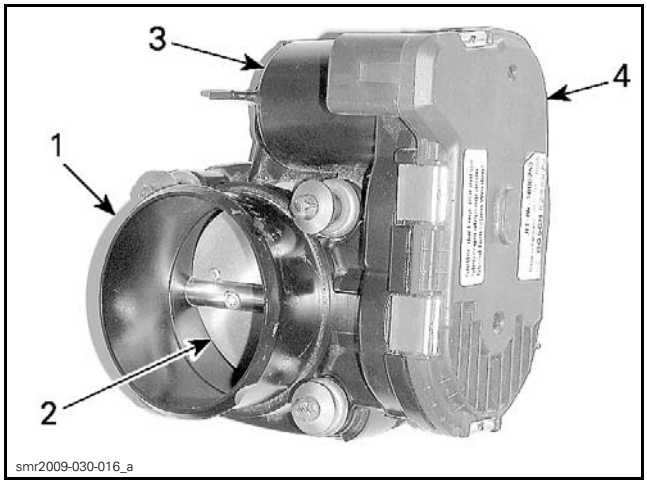

1. Throttle body
2. Throttle plate
3. Throttle actuator (electric motor inside)
4. Throttle position sensor (TPS) (inside)

Electric Throttle Actuator (ETA)

The electric throttle actuator (ETA) is a DC motor on the throttle body that regulates the throttle plate via a drive gear. It receives its control signal from the ECM. Pulse width modulation (PWM) is used to control the motor.

Throttle Plate Operating Positions

Two torsional springs are connected to the throttle plate. A main spring and another one in a plunger mechanism.

When there is no power to the throttle actuator (ETA), the plunger mechanism maintains the throttle plate at a rest position. This also serves as the limp home position.

When the throttle plate is opened by the ETA as commanded by the ECM, it acts against the main spring. If the ETA failed, the return spring would bring the throttle plate back to the limp home position.

ECM	ENGINE	THROTTLE BODY
OFF	Stopped	Throttle actuator: Off. Throttle plate: Rest position, maintained opened at approximately 8° (1). This is also the limp home position.
ON	Not started	Throttle actuator: On. Throttle plate: Moves from the rest position to approximately 15°. It then moves back to the rest position. This is the diagnostic mode where the rest position, actuator opening force to overcome the return springs and the motor return rate are monitored. If any of these parameters are out of range, a fault code is initiated.
ON	Started. Normal operation at idle	Throttle actuator: On. Throttle plate: Moves from the rest position to idle position (approximately 1-3°) according to ECM injection and ignition maps. Throttle plate is opened and closed as necessary to control the idle speed.
ON	Started. Normal operation at various RPM	Throttle actuator: On. Throttle plate: Opens and closes according to ECM torque management priorities.
(1) Degree values are given from the fully closed position.		

Throttle-Body Faults and Effects

NOTE: Among other things, a weak or broken spring and a sticky throttle plate are validated by the throttle body diagnostic mode.

FAULT	EFFECT
Partial failure of TAS sensor (one internal sensor only)	Limp home mode. Engine speed limited to idle. ECM will use the remaining TAS sensor. Fault code set and beeper activated to emit warning signals. Check engine light is turned ON. Driveability could be reset by releasing and reapplying the throttle.
Complete failure of TAS sensor (both internal sensors)	Limp home mode. Engine speed limited to 2500 RPM. Fault code set and beeper activated to emit warning signals. Check engine light is turned ON.
Any throttle body failure	Limp home mode. Engine speed limited to 2500 RPM. Engine speed can still be increased up to 3200 RPM using the throttle lever. Fault code set and beeper activated to emit warning signals. Check engine light is turned ON.
NOTE: When one of these faults is active, O.T.A.S. will continue to monitor its input signals. However, since the engine speed is limited, the O.T.A.S. will not be activated.	

Throttle Body Access

Remove central body, refer to *BODY* subsection.

Throttle Body Lubrication

No lubrication is required.

Electric Throttle Actuator (ETA) Test

Electric Throttle Actuator (ETA) Test with B.U.D.S.

1. Connect vehicle to the latest B.U.D.S. version. Refer to *COMMUNICATION TOOLS AND B.U.D.S.* subsection.
2. Press the START/STOP button to wake up the ECM.
3. Install the tether cord on the engine cut-off switch.
4. In B.U.D.S., select:
   - **Read Data** button
   - **Setting** page tab.

NOTE: Use the **Setting** page to confirm ETA movement. The Monitoring page will not read the actual ETA movement.

5. Slowly depress the throttle lever from the idle to WOT. The ETA should go from almost 10% to 100%.

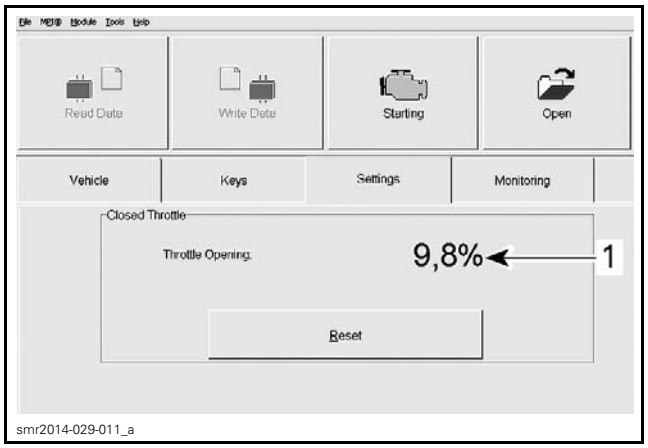

TYPICAL
1. ETA position

If result is out of specification, carry out a *CLOSED THROTTLE RESET*. Refer to *ADJUSTMENT* in this subsection.

NOTE: The ETA is reset at the same time as the TPS.

After the reset, test ETA again.

If the result is still out of specification, check wire continuity between ECM and throttle body before assuming the ETA is at fault.

Throttle Body Inspection

Always check for corroded terminals or damaged wiring when diagnosing throttle body problems.

Throttle Body Dynamic Tests

1. Remove the parts required to access the throttle body, refer to *THROTTLE BODY REMOVAL.*
2. Remove the air inlet hose from the throttle body.
3. Observe the throttle plate with the engine stopped.

NOTE: The throttle plate should be in the rest position (slightly opened).

⚠ WARNING

Keep your fingers out of the throttle plate area while the ECM turns on. The throttle actuator will cycle. This could cause serious finger injuries as throttle plate quickly moves.

4. As you observe the throttle plate, have someone press the START/STOP button to wake up the ECM.

NOTE: The throttle plate should cycle quickly from the rest position to a partially open position (approximately 15°), then back to the rest position.

5. Install the tether cord on the engine cut-off switch.

NOTE: The throttle plate should cycle again.

6. As you observe the throttle plate, have someone gradually and evenly pull in the throttle lever, then release it in the same way.

NOTE: The throttle plate should open then close according to throttle lever position however, the movement of the throttle plate may not be linear with the displacement of the throttle lever.

If any test failed, proceed with the *THROTTLE BODY STATIC TESTS.*

Throttle Body Static Tests

⚠ WARNING

First ensure the ECM is off. Do not move the throttle plate using your fingers. Otherwise, should the START/STOP button be pressed, the ECM would turn on and quickly cycle the throttle plate which could cause serious finger injury.

1. Using a blunt tool, push in on the throttle plate and ensure it opens smoothly within the throttle body.

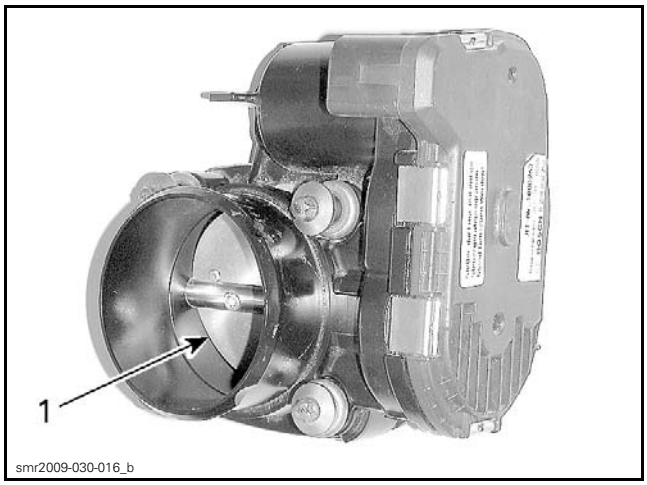

1. Push here to open

NOTE: The throttle plate must open fully and return freely to the rest position (slightly opened) when released.

2. Push throttle plate closed as indicated in following illustration. It must close completely and return freely to the rest position (slightly opened) when released.

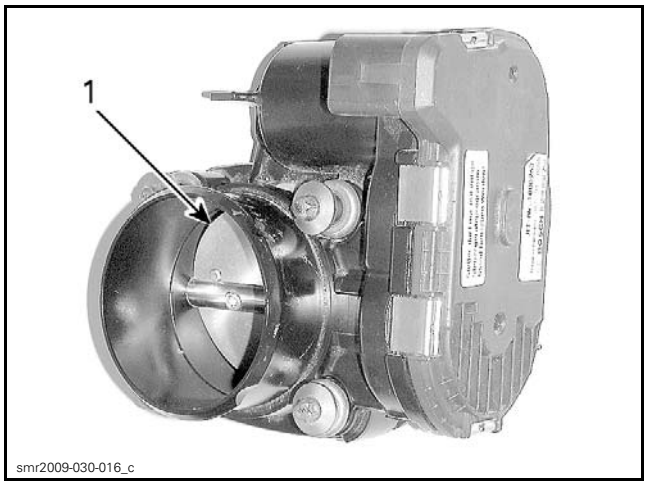

1. Push here to close

If the throttle plate does not move smoothly or does not return freely to the rest position, the problem is mechanical. Check for salt accumulation on throttle plate shaft. It may also be an actuator or gear problem. Replace throttle body as necessary.

If throttle plate operates normally, the problem is electrical. Check electric throttle actuator (ETA) wiring continuity, throttle position sensor (TPS) and throttle accelerator sensor (TAS).

⚠ WARNING

If the throttle plate does not return to its rest position properly after a proper cleaning, replace the throttle body.

Throttle Body Cleaning

Remove the parts required to access the throttle body, refer to *THROTTLE BODY REMOVAL.*

Check throttle body cleanliness using a flashlight. Fully open throttle plate and verify:

– Throttle body bore
– Throttle plate edge.

Look for:

– Dirt
– Oily surfaces
– Carbon and salt deposits on throttle plate and the surrounding bore.

Clean as necessary.

NOTICE **Only use an appropriate throttle body cleaner that will not damage O-rings and EFI sensors.**

⚠ WARNING

Use the product in well ventilated area. Refer to product manufacturer's warnings. Wipe off any product leakage in bilge.

To avoid getting dirt into engine, spray cleaner on a clean rag (outside the bilge) then rub rag against throttle plate and bore. A toothbrush works well too.

⚠ WARNING

First ensure ECM is off. Otherwise, if ECM should suddenly turn off, it would quickly close the throttle plate which could cause serious finger injury.

Manually open throttle and hold fully open to reach all surfaces.

⚠ WARNING

Ensure nobody presses the START/STOP button. The ECM would turn on and the throttle actuator (ETA) would cycle. This could cause serious finger injury as the throttle plate moves quickly.

To remove residual dirt, spray cleaner on throttle plate and on bore.

Reinstall removed parts.

Throttle Body Replacement

Throttle Body Removal

1. Remove central body. Refer to *BODY* subsection.
2. Disconnect inlet hose from throttle body.
3. Disconnect throttle body connector.

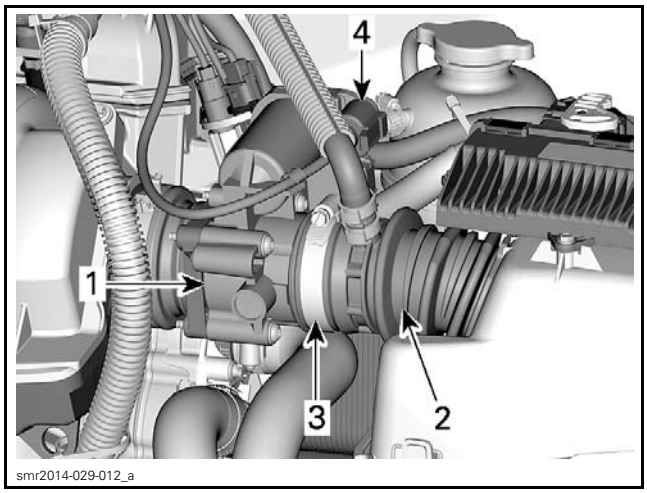

TYPICAL
1. *Throttle body*
2. *Inlet hose*
3. *Inlet hose clamp*
4. *Throttle body connector*

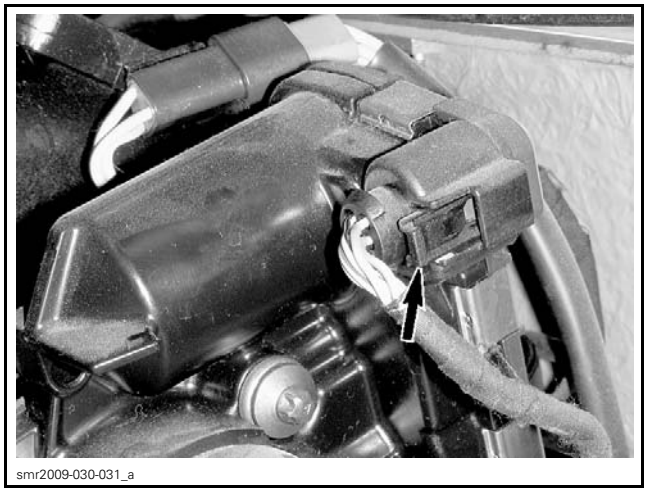

PRESS HERE TO UNLOCK

4. Remove retaining screws from throttle body.

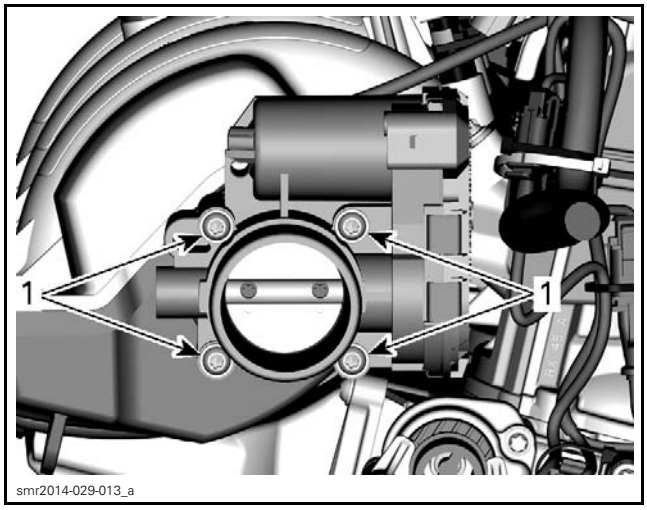

1. *Throttle body screws*

5. Pull throttle body off intake manifold.

Throttle Body Installation

Installation of the new throttle body is the reverse of the removal procedure. However, pay attention to the following.

1. Tighten retaining screws to specification as per following sequence.

RETAINING SCREW TIGHTENING SEQUENCE	
Step 1	5 N•m ± 0.6 N•m (44 lbf•**in** ± 5 lbf•**in**)
Step 2 through 5	9 N•m ± 1 N•m (80 lbf•**in** ± 9 lbf•**in**)

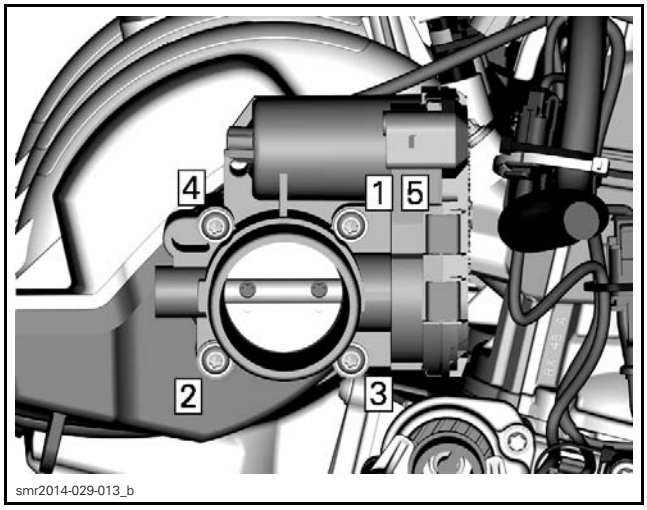

2. Perform the *CLOSED THROTTLE RESET*. See procedure in *ADJUSTMENTS*.

THROTTLE POSITION SENSOR (TPS)

General

NOTE: The TPS is part of the throttle body.

The throttle position sensor (TPS) is a double potentiometer that sends signals to the ECM that are proportional to the throttle plate angle. The TPS is located inside the throttle body.

TPS Wear Test

1. With the engine turned off, slowly pull in throttle lever and pay attention for smooth operation without physical stops.
2. Press the START/STOP button to wake up the ECM.
3. Install the tether cord on the engine cut-off switch.
4. Connect watercraft to B.U.D.S. software. Refer to *COMMUNICATION TOOLS AND B.U.D.S.* subsection.

5. In B.U.D.S., click the following:
   – **Monitoring** tab
   – **ECM** tab.
6. Slowly and regularly depress the throttle lever.
7. Observe the Throttle Opening needle movement in B.U.D.S.

MONITORING AND ECM TABS

NOTE: The needle should move gradually and regularly as you move the throttle lever. If the needle "sticks", bounces or suddenly drops, it may indicate a worn TPS that needs to be replaced. An initial slight delay after the throttle lever is pulled and before the needle starts to move is normal.

If the needle behavior is not as expected, proceed with the following steps.

8. Manually move the throttle plate in throttle body using a blunt tool (without sharp tip).

⚠ WARNING

Do not move throttle plate with your fingers. Otherwise, if ECM should turn off, it would quickly close the throttle plate which could cause serious finger injury.

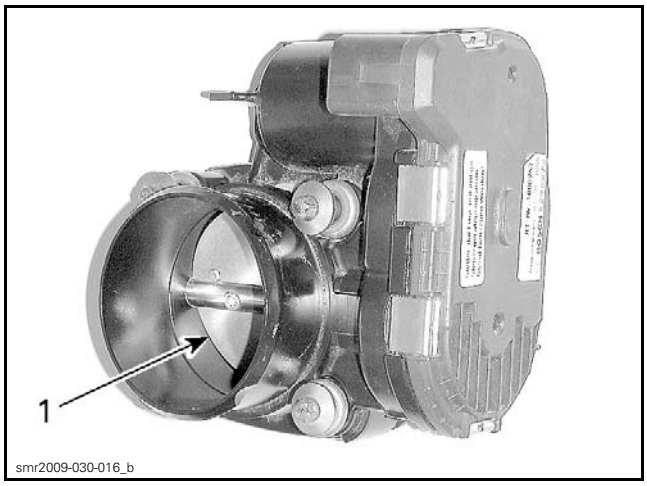

1. Push here

9. Check needle movement again.
   – If needle moves as expected, check the throttle accelerator sensor (TAS). Refer to *THROTTLE ACCELERATOR SENSOR (TAS)* in the *INTELLIGENT THROTTLE CONTROL (ITC)* subsection.
   – If needle does not move as expected, perform the *TPS RESISTANCE TEST* in this subsection.

TPS Resistance Test

1. Remove the parts required to access the throttle body, refer to *THROTTLE BODY REMOVAL* in this subsection.
2. Ensure the throttle body connector is properly connected.
3. Disconnect ECM-A connector from the ECM, refer to *ECM CONNECTOR ACCESS* in this subsection.
4. Use the FLUKE 115 MULTIMETER (P/N 529 035 868) and select Ω.
5. Probe circuit as per following table while using a finger to manually move throttle plate.

ECM ADAPTER		FULLY CLOSED THROTTLE PLATE (1)		FULLY OPEN THROTTLE PLATE	
		RESISTANCE (Ω)			
PIN		MIN.	MAX.	MIN.	MAX.
A-A2	A-K4	625	3000	625	3000
A-A2	A-K3	678	3768	163	1260
A-A2	A-F3	178	1368	700	3840
A-K3	A-K4	163	1260	678	3768
A-K3	A-F3	925	4800	925	4800
A-K4	A-F3	700	3840	178	1368
(1) To obtain the fully closed position, it is necessary to push against the throttle plate in the throttle body with a finger and hold it in this position for the measurement.					

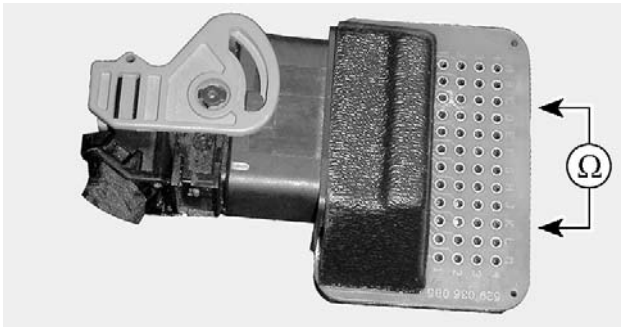

vmr2008-022-005_a

If any resistance value is incorrect, check wire continuity between ECM and throttle body before assuming the TPS is at fault. Refer to *WIRING DIAGRAM* subsection.

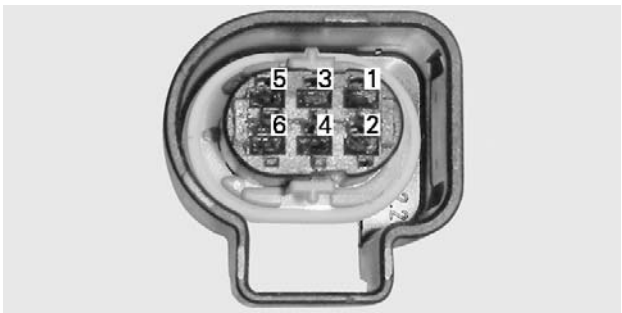

smr2009-030-032_a

TPS CONNECTOR PIN-OUT

If the TPS resistance values are correct, try a new ECM. Refer to *ENGINE CONTROL MODULE (ECM)* in this subsection.

CRANKSHAFT POSITION SENSOR (CPS)

CPS TROUBLESHOOTING

When troubleshooting a CPS fault, take into account that a CPS fault can be triggered by bent or missing encoder wheel teeth.

Push START/STOP button and crank engine. If engine does not start within 15 seconds check for fault codes using B.U.D.S.

CPS and CPS Connector Location

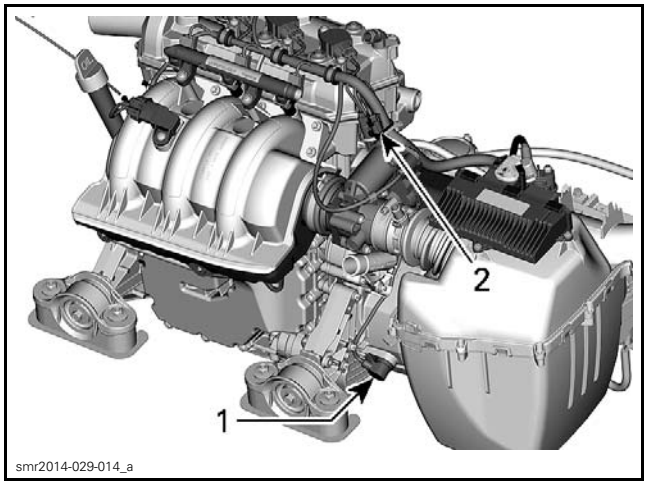

smr2014-029-014_a

TYPICAL - RH SIDE OF ENGINE
1. *CPS location*
2. *CPS connector location*

CPS Connector Access

1. Remove central body, refer to *BODY* subsection.

CPS Resistance Test at ECM Connector

1. Remove parts required to access ECM-A connector, refer to *ECM CONNECTOR ACCESS* in this subsection.
2. Disconnect ECM-A connector from the ECM and connect it to the ECM adapter.

REQUIRED TOOL	
ECM ADAPTER TOOL (P/N 529 036 166)	

3. Set the FLUKE 115 MULTIMETER (P/N 529 035 868) to Ω.

529035868

4. Measure the resistance of the sensor as per following table.

ECM A CONNECTOR		RESISTANCE @ 20°C (68°F)
Pin H1	Pin K2	775 - 950 Ω

If resistance is as specified, test continuity of wiring between ECM-A and CPS connectors. Refer to *WIRING DIAGRAM* subsection.

If resistance value is not as specified, reconnect ECM-A connector to the ECM and refer to *CPS RESISTANCE TEST AT CPS CONNECTOR*.

CPS Resistance Test at CPS Connector

1. Disconnect CPS wiring harness connector.

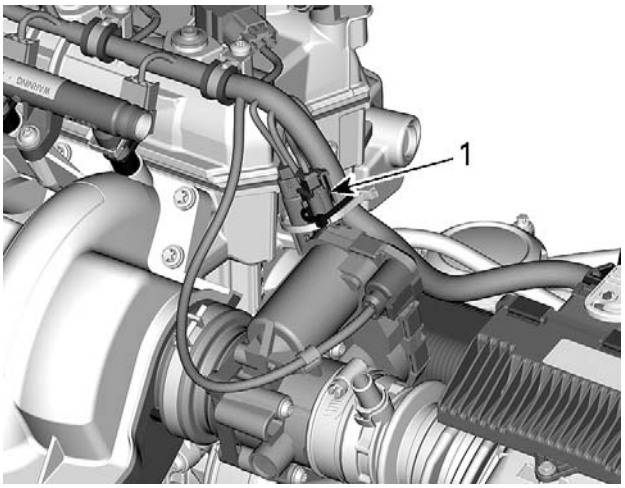

smr2014-029-015_a

FRONT OF ENGINE
1. CPS connector location

2. Probe CPS connector terminals as per following table.

CPS CONNECTOR		MEASUREMENT
PIN		RESISTANCE Ω @ 20°C (68°F)
1	2	775 - 950 Ω

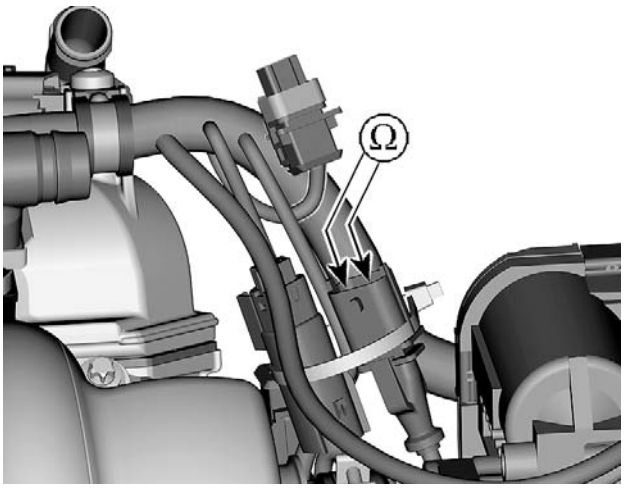

smr2014-029-029_a

If resistance is not within specifications, replace the CPS.

If resistance tests good, carry out a *CPS OUTPUT VOLTAGE TEST*.

CPS Voltage Test

1. Press the START/STOP button to wake up the ECM.
2. Install the tether cord on the engine cut-off switch.
3. Pull the throttle lever completely in to the handlebar and hold (drowned mode).
4. While cranking the engine, probe CPS terminals.

CPS CONNECTOR		MEASUREMENT
PIN		VOLTAGE
1	2	Approximately 3.7 Vac

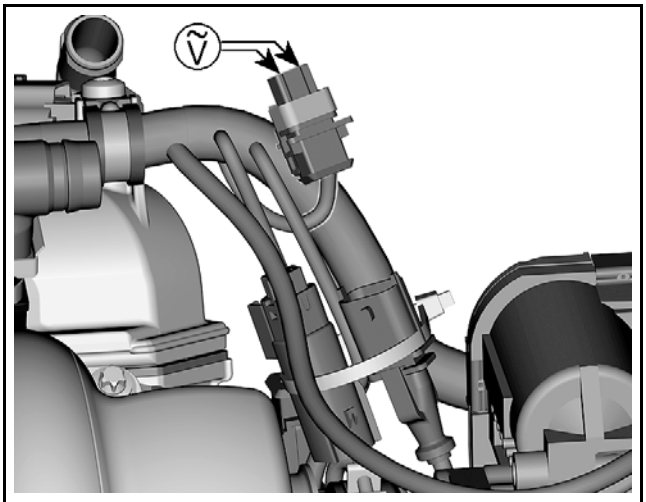

smr2014-029-029_b

If voltage is not as specified, carry out a *CPS RESISTANCE TEST*.

If voltage is as specified, check continuity of wiring between CPS connector and ECM connector. Refer to *WIRING DIAGRAM*.

CPS Replacement

1. Remove air intake silencer to access the CPS, refer to *AIR INTAKE SYSTEM* subsection.
2. Take note of factory CPS wire harness routing for reinstallation.
3. Disconnect CPS connector and cut harness locking ties (4).

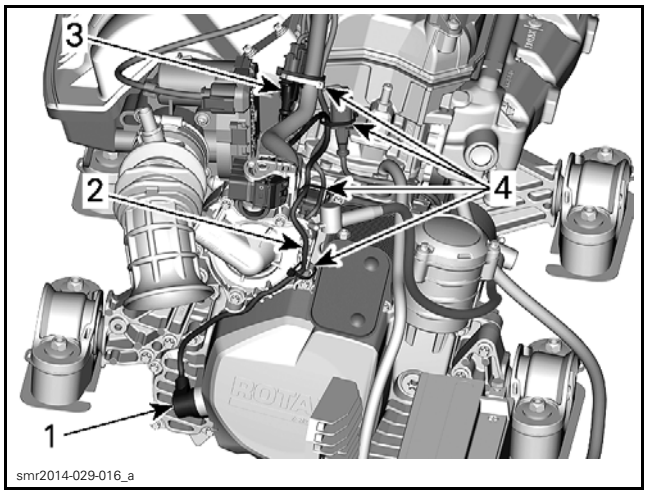

1. CPS
2. CPS wiring harness
3. CPS connector
4. Locking ties (4)

4. Remove CPS retaining screw and pull on CPS to remove it from engine.

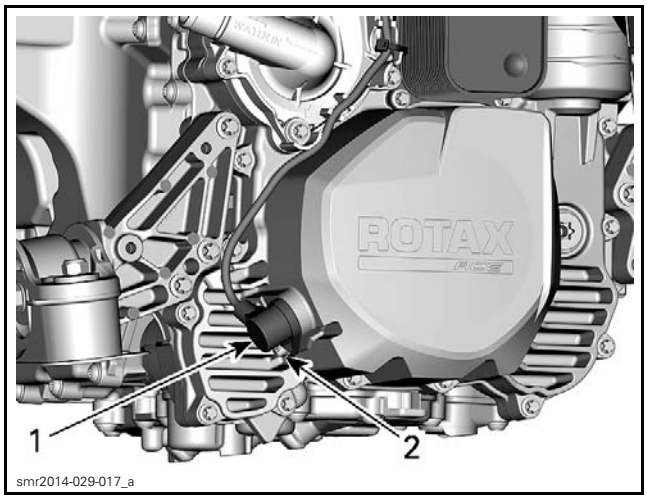

1. CPS
2. Retaining screw

5. Install new CPS.

CPS INSTALLATION	
O-RING	SERVICE PRODUCT
	APPLY ENGINE OIL ON O-RING
CONNECTOR	SERVICE PRODUCT
	DIELECTRIC GREASE (P/N 293 550 004)
RETAINING SCREW	SERVICE PRODUCT
	LOCTITE 243 (BLUE) (P/N 293 800 060)
	TORQUE
	9 N•m ± 1 N•m (80 lbf•**in** ± 9 lbf•**in**)

6. Route and secure CPS harness using locking ties as noted prior to removal.
7. Reconnect CPS connector.
8. Install air intake silencer, refer to *AIR INTAKE SYSTEM* subsection.

NOTE: Ensure tab on air hose is aligned between the two marks on the intake silencer.

9. Install all remaining removed parts, refer to applicable subsection.

CAMSHAFT POSITION SENSOR (CAPS)

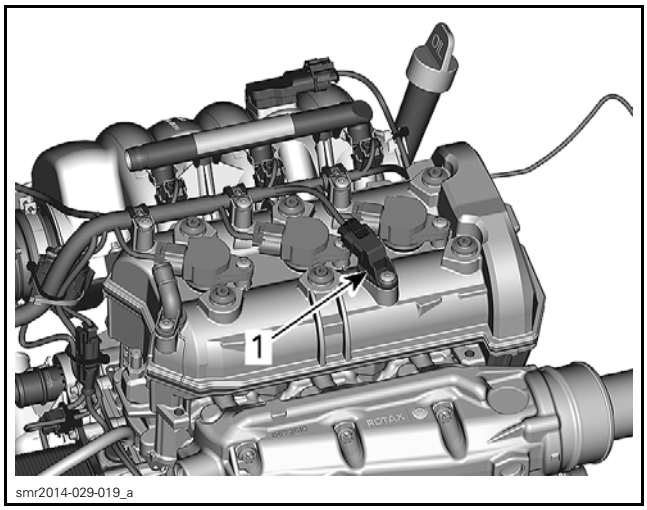

1. CAPS

CAPS Access

Remove central body, refer to *BODY* subsection.

CAPS Voltage Test (Harness Side)

1. Remove the parts required to access the CAPS, refer to *CAPS ACCESS.*

2. Disconnect CAPS connector.

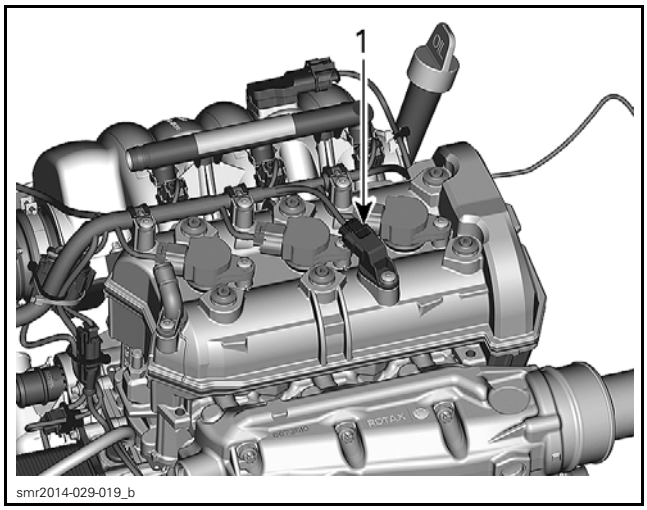

smr2014-029-019_b

1. CAPS connector

3. Press the START/STOP button to wake up the ECM.
4. Install tether cord on engine cut-off switch.
5. Probe harness connector terminals as per following table.

CAPS CONNECTOR		MEASUREMENT
PIN		VOLTAGE
3	1	Battery voltage

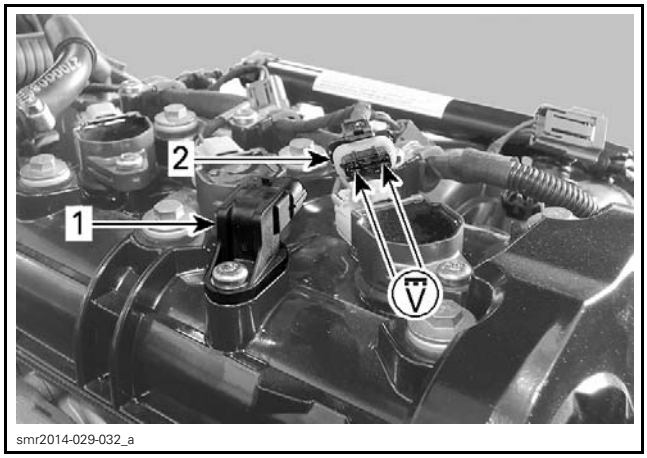

smr2014-029-032_a

1. CAPS
2. CAPS connector

If battery voltage is read, proceed with *CAPS DYNAMIC TEST* further in this subsection.

If battery voltage is not read, probe circuit as per following table.

CAPS CONNECTOR		MEASUREMENT
PIN		VOLTAGE
3	Battery ground	Battery voltage

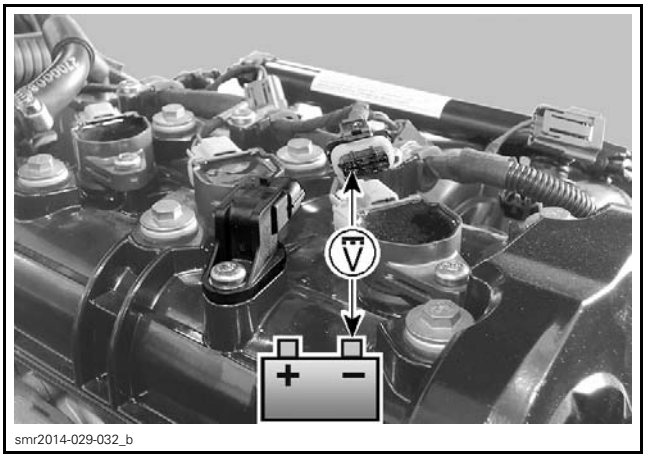

smr2014-029-032_b

If voltage is read to battery ground, check continuity of ground circuit between CAPS pin 1 and ECM connector "A" pin E2. Repair or replace wiring and connectors.

If voltage is not read to battery ground, carry out a *CONTINUITY TEST OF CAPS POWER CIRCUIT*.

Continuity Test of CAPS Power Circuit

1. Remove cover from fuse box. Refer to *POWER DISTRIBUTION*.
2. Remove 10 amp ACC fuse (F1).

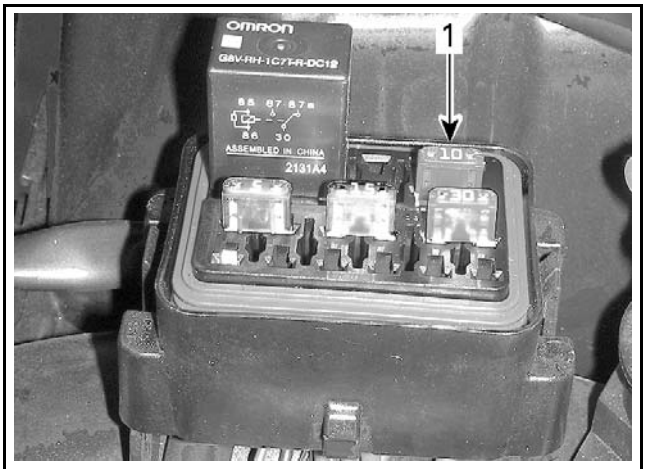

smr2014-029-020_a

1. Pull out fuse (F1)

3. Use the FLUKE 115 MULTIMETER (P/N 529 035 868) and select Ω.
4. Read resistance of the CAPS circuit as per following table.

FUSE BOX	CAPS CONNECTOR	RESISTANCE
TERMINAL	PIN	Ω
B1	3	Close to 0 Ω (continuity)

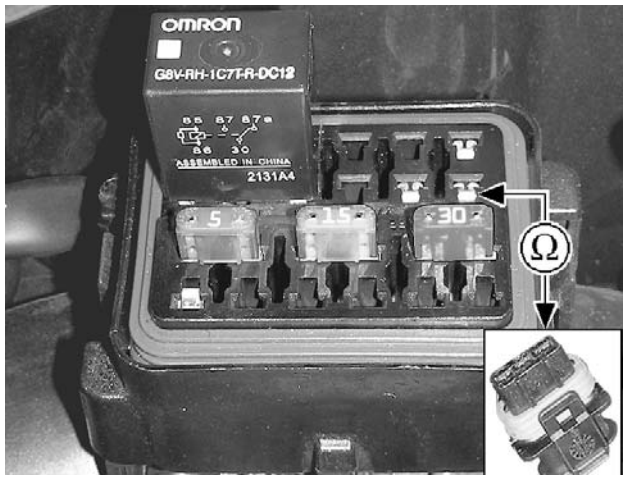

smr2014-029-021_a

If continuity is good, wiring and connectors are functional.

If a high resistance or an open circuit is measured, refer to *WIRING DIAGRAM* and check the following:

– Continuity from CAPS connector pin 3 to engine connector pin 4
– Continuity from engine connector pin 4 to fuse box contact B1

Pay attention to connector pin contact and junction JT-1 (VT/GY).

Repair or replace wiring and connectors as required.

5. Reinstall all removed parts.

CAPS Dynamic Test

1. Remove the parts required to access the CAPS, refer to *CAPS ACCESS.*
2. Remove CAPS sensor from engine.
3. Back-probe connector and read voltage as follows.

NOTE: To safely probe wire terminals through the back of the connector, use the following tool or an equivalent.

REQUIRED TOOL
FLUKE AUTOMOTIVE BACK PROBE PIN (P/N TP40)

TP40

FLUKE AUTOMOTIVE BACK PROBE PIN P/N TP40

NOTICE **Do not use sharp end probes. They could damage the connector seal.**

Probes can be inserted at the end of the FLUKE SUREGRIP INSULATED TEST LEADS (P/N TL224).

tl224

4. Briefly press the START/STOP button to wake up the ECM.
5. Install the tether cord cap on the engine cut-off switch.
6. Read voltage as per following tables.

CAPS CONDITION	CAPS CONNECTOR		VOLTAGE
Free	3	2	Close to 0 Vdc

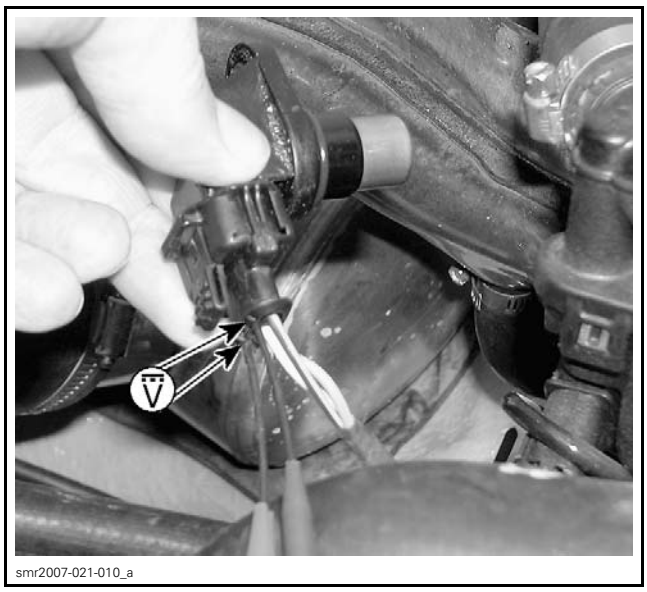

smr2007-021-010_a

TYPICAL

CAPS CONDITION	CAPS CONNECTOR		VOLTAGE
Metallic object on sensor	3	2	Battery voltage

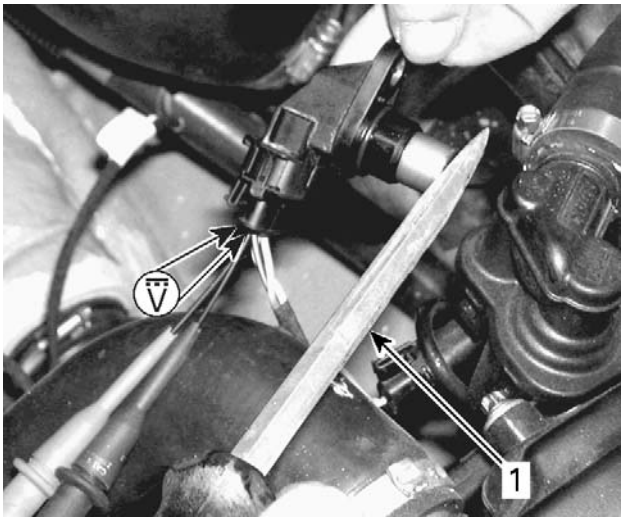

TYPICAL
1. Metallic object

If voltage is as specified, repair or replace wiring and connectors between sensor and ECM.

If wiring is good, check ECM. Refer to *ENGINE CONTROL MODULE (ECM)*.

If battery voltage is not measured as specified, try a new CAPS.

CAPS Replacement

1. Disconnect CAPS connector.

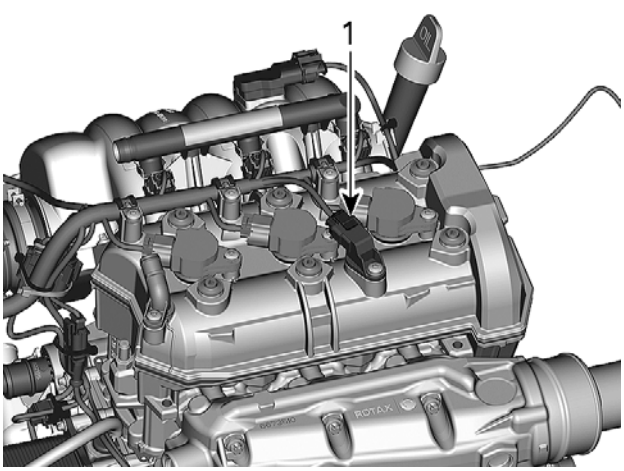

1. CAPS connector

2. Unscrew the CAPS retaining screw.

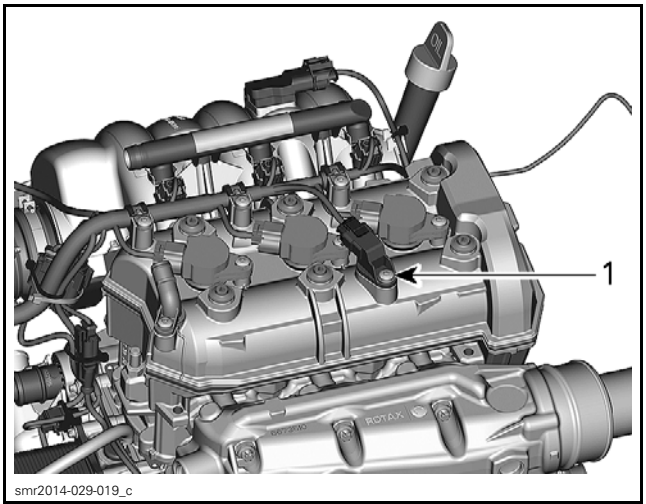

1. CAPS retaining screw

3. Pull CAPS from engine.
4. Install the new CAPS.

NOTICE **Be sure to install new O-ring on the new CAPS.**

CAPS INSTALLATION	
O-RING	SERVICE PRODUCT
	APPLY ENGINE OIL ON O-RING
CONNECTOR	SERVICE PRODUCT
	DIELECTRIC GREASE (P/N 293 550 004)
RETAINING SCREW	TORQUE
	9 N•m ± 1 N•m (80 lbf•**in** ± 9 lbf•**in**)

MANIFOLD ABSOLUTE PRESSURE AND TEMPERATURE SENSOR (MAPTS)

NOTE: This sensor is a multifunction device. It measures manifold absolute pressure and intake air temperature for air flow calculations.

MAPTS Access

To access the MAPTS, remove the central body. Refer to *BODY* subsection.

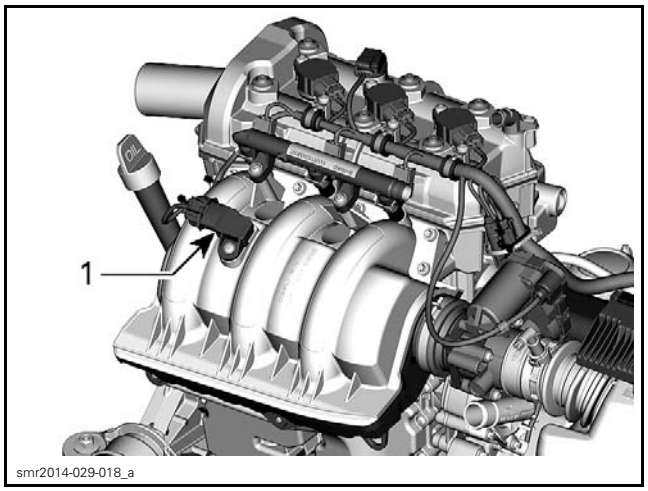

MAPTS LOCATION
1. Manifold air pressure and temperature sensor (MAPTS)

MAPTS Pressure Function

Before the engine is started, when power is applied to the system, the sensor measures the ambient atmospheric air pressure. The ambient air pressure is at that moment stored in the ECM. Thereafter, once the engine is started, it measures the air pressure in the intake manifold at operating RPMs.

The sensor must be correctly installed on the intake manifold. Otherwise, the MAPTS could generate a fault code for an unexpected sensor range at idle when it reads an erroneous intake manifold pressure. If this is the case, remove sensor and check for oil or dirt on its end and if problem persists, check throttle plate condition/position and the wiring harness. Perform the following tests.

MAPTS Quick Test (Pressure Function)

1. Connect vehicle to B.U.D.S. Refer to *COMMUNICATION TOOLS AND B.U.D.S.* subsection.
2. In B.U.D.S., select the following:
   - **Read Data**
   - **Monitoring** page tab
   - **ECM** page.

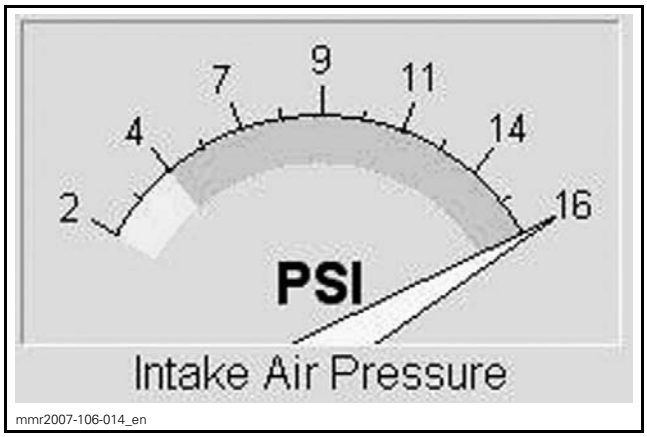

TYPICAL - MAPTS PRESSURE READING IN B.U.D.S.

3. Look for and take note of the MAPTS pressure reading while the engine is stopped.

NOTE: The indicated intake air pressure in B.U.D.S. must be within 3.4 kPa (.5 PSI) of local atmospheric pressure when the engine is stopped.

MAPTS PRESSURE FUNCTION QUICK TEST			
RESULT	SERVICE ACTION		
NO READING	Circuit Continuity Test of MAPTS Pressure Function	MAPTS Input Voltage Test	Repair or replace wiring
VALUE IS OUT OF RANGE	Replace MAPTS		

4. Perform the same test with a new MAPTS and compare both readings.

MAPTS Input Voltage Test

1. Remove parts required to access the MAPTS, refer to *MAPTS ACCESS*.
2. Remove electrical connector from MAPTS.

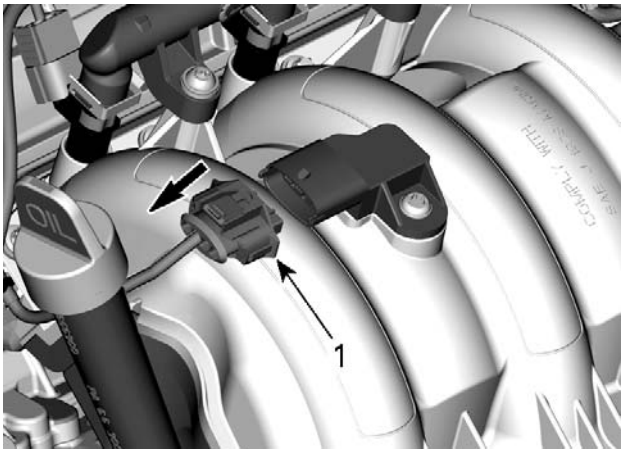

smr2014-029-023_a

1. *MAPTS connector*

3. Briefly press START/STOP button.
4. Install tether cord cap on engine shut-off switch.
5. Using a FLUKE 115 MULTIMETER (P/N 529 035 868) set to Vdc, measure for MAPTS input voltage as per following table.

MAPTS CONNECTOR		MEASUREMENT
PIN		VOLTAGE
1	3	5 Vdc

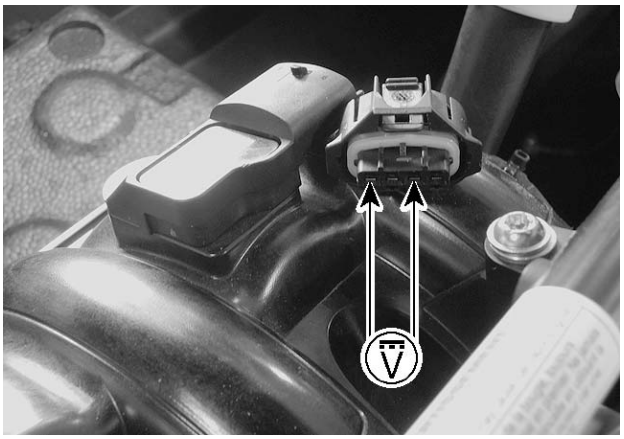

smr2014-029-033_a

If voltage test is good, replace the MAPTS.

If voltage test is not good, carry out the *MAPTS CIRCUIT CONTINUITY TEST (PRESSURE FUNCTION)*.

MAPTS Circuit Continuity Test (Pressure Function)

1. Remove parts required to access ECM connectors, refer to *ECM CONNECTOR ACCESS* in this subsection.
2. Disconnect the ECM-A connector from the ECM and connect it to the ECM adapter tool.

ECM ADAPTER TOOL (P/N 529 036 166)	

3. Using the FLUKE 115 MULTIMETER (P/N 529 035 868) set to Ω and check continuity of the following circuits.

529035868

MAPTS CIRCUIT CONTINUITY TEST (PRESSURE FUNCTION)		
ECM-A	MAPTS CONNECTOR	RESISTANCE VALUE
Pin B4	Pin 3	Close to 0 Ω
Pin G4	Pin 4	
Pin H2	Pin 1	

If resistance is not within specification, repair or replace the wiring harness between ECM connector and the MAPTS. Refer to *WIRING DIAGRAM.*

MAPTS Temperature Function

The MAPTS also monitors the temperature of the air in the intake manifold.

MAPTS Quick Test (Temperature Function)

1. Connect vehicle to B.U.D.S. Refer to *COMMUNICATION TOOLS AND B.U.D.S.* subsection.
2. In B.U.D.S., select the following:
   - **Read Data**
   - **Monitoring** page tab
   - **ECM** page.
3. Look for the **Intake Air** temperature reading while the engine is stopped.

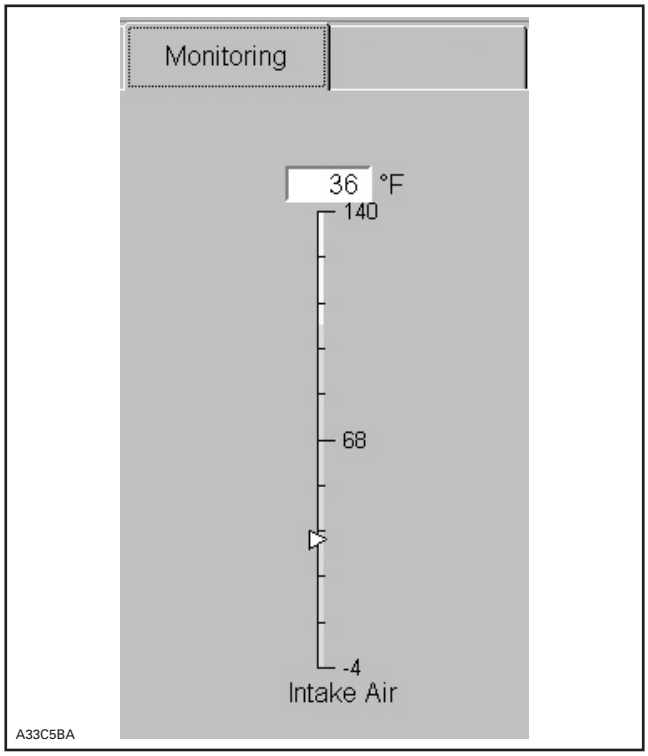

TYPICAL - MONITORING PAGE TAB, ECM

NOTE: If the complete vehicle is at room temperature, B.U.D.S. should display the ambient air temperature at the intake manifold.

4. Perform the same test with a new MAPTS and compare both readings.

If the engine's MAPTS temperature reading is significantly different than the new MAPTS, replace it.

NOTE: Both sensors must feel same ambient air temperature.

If there is no reading, carry out a *MAPTS RESISTANCE TEST (TEMPERATURE FUNCTION)*.

MAPTS Resistance Test (Temperature Function)

1. Disconnect the MAPTS connector.
2. Using the FLUKE 115 MULTIMETER (P/N 529 035 868) set to Ω, test MAPTS resistance at the sensor as per following tables.

MAPTS		MEASUREMENT
PIN		Refer to MAPTS TEMPERATURE SENSOR TABLE
1	2	

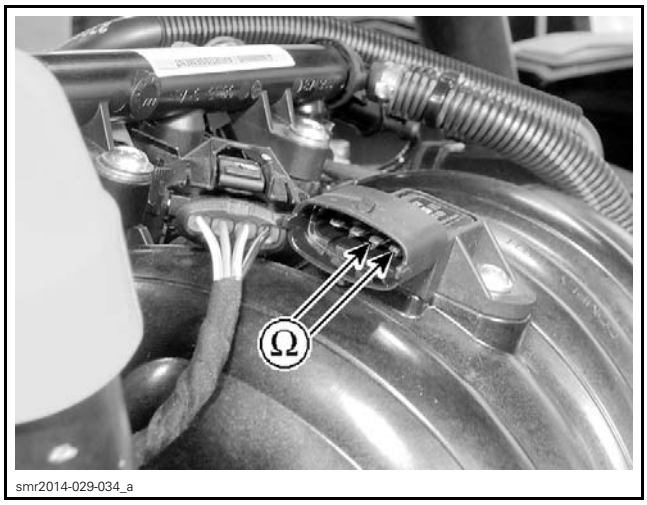

MAPTS TEMPERATURE SENSOR TABLE		
TEMPERATURE		RESISTANCE (ohms)
°C	°F	MAPTS
- 40	- 40	40528 to 56935
- 10	- 14	8103 to 10919
20	68	2193 to 2863
80	176	294 to 368
120	248	98 to 122

If resistance is not within specification, replace the MAPTS.

If resistance tests good, **reconnect** the MAPTS and proceed with the following steps.

3. Disconnect the ECM-A connector.
4. Install ECM-A connector on the ECM adapter tool.

REQUIRED TOOL	
ECM ADAPTER TOOL (P/N 529 036 166)	

5. Using a multimeter, recheck resistance value as per following table.

ECM ADAPTER		MEASUREMENT
PIN		Refer to MAPTS TEMPERATURE SENSOR TABLE
H2	H3	

MAPTS TEMPERATURE SENSOR TEST RESULTS			
RESULT	SERVICE ACTION		
NO READING	Circuit Continuity Test of MAPTS Temperature Function	MAPTS Input Voltage Test	Repair or replace wiring
INCORRECT RESISTANCE VALUE	Check condition of connector pins, replace MAPTS		
CORRECT RESISTANCE VALUE	Try a new ECM		

MAPTS Circuit Continuity Test (Temperature Function)

MAPTS CIRCUIT CONTINUITY TEST (TEMPERATURE FUNCTION)		
ECM ADAPTER	MAPTS CONNECTOR	RESISTANCE VALUE
Pin H2	Pin 1	Close to 0 Ω
Pin H3	Pin 2	

Repair or replace wiring as required.

MAPTS Replacement

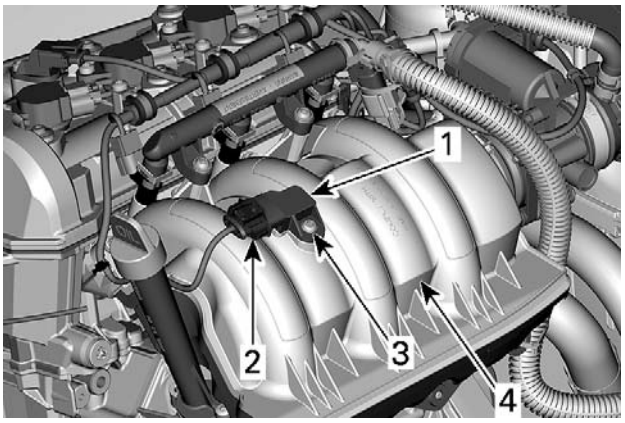

smr2014-029-022_a

1. *MAPTS*
2. *MAPTS connector*
3. *Retaining screw*
4. *Intake manifold*

1. Disconnect MAPTS connector and remove the MAPTS from the intake manifold.
2. Install new MAPTS as per following table.

MAPTS INSTALLATION	
Retaining screw	TORQUE
	4.5 N•m ± 0.5 N•m (40 lbf•**in** ± 4 lbf•**in**)
Connector	SERVICE PRODUCT
	DIELECTRIC GREASE (P/N 293 550 004)

COOLANT TEMPERATURE SENSOR (CTS)

Overheat Warning

The CTS will cause the engine overheat warning to come on when the coolant temperature is above 100°C (212°F).

CTS Access

The CTS is located on the forward end of the engine, between the water pump and oil cooler.

To access the CTS, remove the central body. Refer to *BODY* subsection.

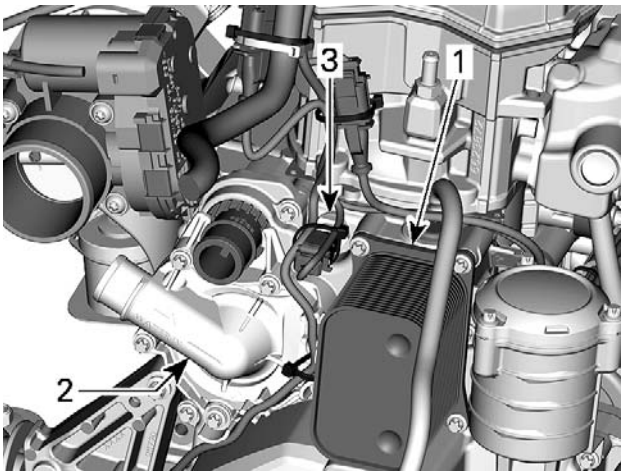

smr2014-029-024_a

TYPICAL - FORWARD END OF ENGINE
1. *Oil cooler*
2. *Water pump*
3. *Coolant temperature sensor (CTS)*

CTS Quick Test

1. Connect the vehicle B.U.D.S. Refer to *COMMUNICATION TOOLS AND B.U.D.S.* subsection.
2. In B.U.D.S., select the following:
   – **Read Data** button
   – **Monitoring** page tab
   – **ECM** page.
3. Look for the engine temperature indication.

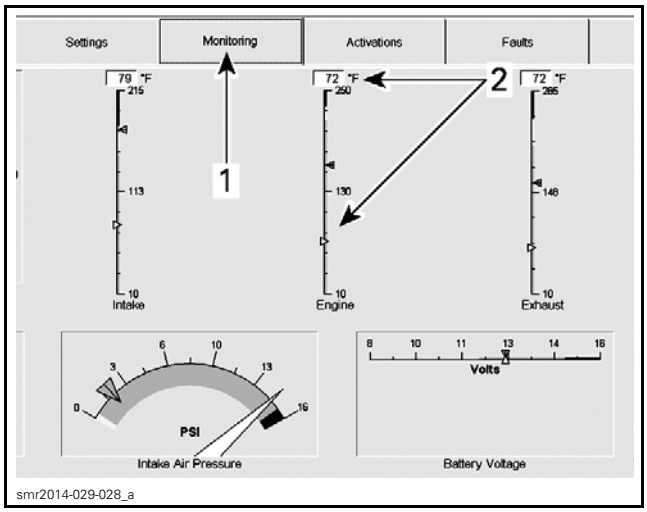

TYPICAL
1. Monitoring tab
2. Engine temperature

The engine temperature gauge in B.U.D.S. should provide an indication of the actual engine coolant temperature. Otherwise, perform the *CTS RESISTANCE TEST*.

CTS Resistance Test

1. Remove parts required to access ECM connectors, refer to *ECM CONNECTOR ACCESS* in this subsection.
2. Disconnect the ECM-A connector.
3. Install ECM-A connector on the ECM adapter tool.

REQUIRED TOOL	
ECM ADAPTER TOOL (P/N 529 036 166)	

4. Using a multimeter, check resistance from the ECM connector as per following table.

ECM ADAPTER		MEASUREMENT
PIN		Refer to CTS TEMPERATURE SENSOR TABLE
A1	J2	

If resistance test is good, refer to *ECM REPLACEMENT*.

If resistance is out of specification, proceed with the following steps.

5. Disconnect the CTS connector.
6. Check continuity of wiring between ECM and CTS connector, refer to *WIRING DIAGRAM*. If there is an open circuit, repair or replace wiring and connectors.
7. If continuity of wiring is good, test the resistance of the sensor as per following tables.

CTS SENSOR		MEASUREMENT
PIN		Refer to CTS TEMPERATURE SENSOR TABLE
1	2	

CTS TEMPERATURE SENSOR TABLE			
TEMPERATURE		RESISTANCE (OHMS)	
°C	°F	LOW	HIGH
- 40	- 40	38457	52630
- 10	14	8208	10,656
20	68	2233	2780
80	176	297	349
120	248	105	122

NOTE: To test sensor at various temperatures, remove sensor and use a heat gun, ice and a thermometer. Refer to *CTS REPLACEMENT*.

If resistance value is correct, repair the connectors or replace the wiring harness between ECM connector and CTS connector.

If resistance value is incorrect, replace the CTS.

CTS Replacement

1. Drain engine coolant to below CTS level, refer to *COOLING SYSTEM* subsection.
2. Cut locking ties on wiring harnesses and move wiring aside for access. Be sure to take note of their position.
3. Disconnect CTS connector.
4. Remove CTS from engine.
5. Install new CTS and tighten to specified torque.

CTS TORQUE
16 N•m ± 2 N•m (142 lbf•**in** ± 18 lbf•**in**)

6. Reinstall remaining removed parts. Be sure to secure wiring harnesses as noted prior to removal.
7. Refill and bleed the cooling system, refer to *PERIODIC MAINTENANCE PROCEDURES* subsection.

EXHAUST GAS TEMPERATURE SENSOR (EGTS)

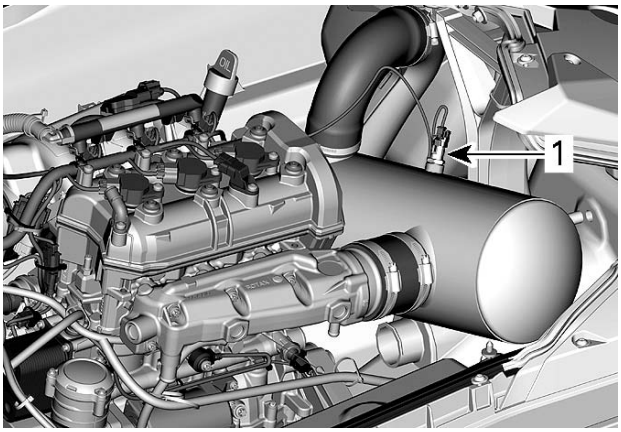

smr2014-029-025_a

1. Exhaust gas temperature sensor (EGTS)

NOTE: An overheat signal will come on in the multifunction gauge when the exhaust gases reach the following temperature.

OVERHEAT TEMPERATURE
95°C (203°F)

EGTS Access

Remove the central body, refer to *BODY* subsection.

EGTS Resistance Test

1. Remove the parts required to access the EGTS, refer to *EGTS ACCESS* in this subsection.
2. Disconnect the EGTS connector.

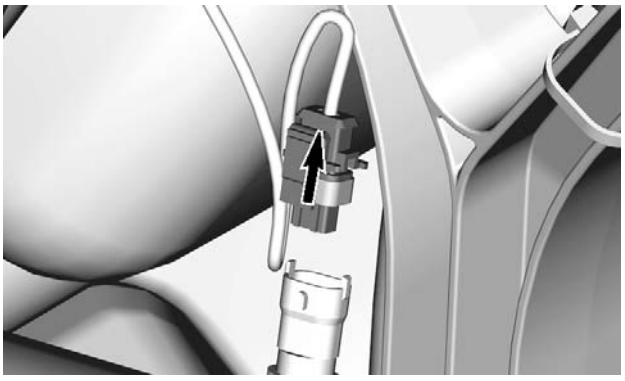

smr2014-015-106_a

EGTS

3. Set the FLUKE 115 MULTIMETER (P/N 529 035 868) to Ω selection and measure the resistance of the sensor.

529035868

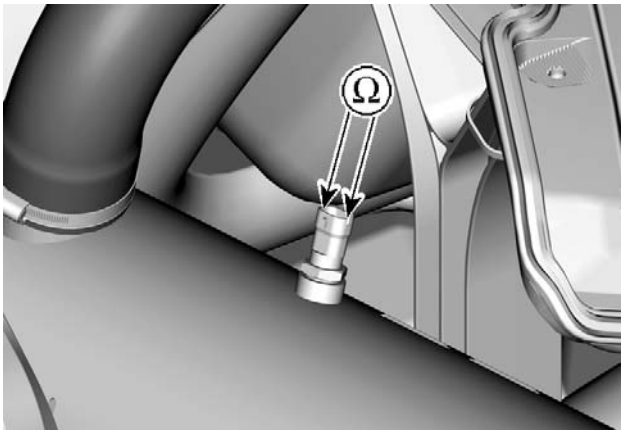

smr2014-029-026_a

The resistance should be as per the *EGTS RESISTANCE CHART* that follows. Otherwise, replace the EGTS.

EGTS TEMPERATURE SENSOR TABLE			
TEMPERATURE		**RESISTANCE (OHMS)**	
°C	°F	LOW	HIGH
- 40	- 40	38457	52630
- 10	14	8208	10,656
20	68	2233	2780
80	176	297	349
120	248	105	122

If the EGTS resistance is within specifications, proceed with the following steps.

4. Reconnect the EGTS.
5. Disconnect ECM-A connector.
6. Using a multimeter and the ECM adapter tool, check the circuit resistance as per following table.

REQUIRED TOOL	
ECM ADAPTER TOOL (P/N 529 036 166)	

ECM ADAPTER		MEASUREMENT
J4	H4	See *EGTS RESISTANCE CHART*

If resistance value is as specified, check ECM. Refer to *ENGINE CONTROL MODULE (ECM)* in this subsection.

If resistance value is not within specifications, repair or replace wiring and connectors between the ECM and the EGTS.

EGTS Replacement

1. Disconnect the EGTS connector.
2. Unscrew EGTS from muffler.
3. Install new EGTS.

EGTS INSTALLATION	
Sensor	SERVICE PRODUCT
	LOCTITE 518 (P/N 293 800 038)
	TORQUE
	16 N•m ± 2 N•m (142 lbf•**in** ± 18 lbf•**in**)
Connector	SERVICE PRODUCT
	DIELECTRIC GREASE (P/N 293 550 004)

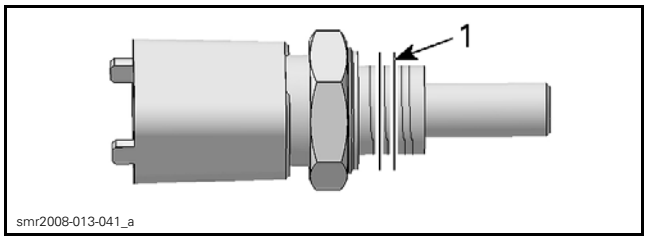

1. Apply Loctite 518 in this area

4. Install the EGTS connector.
5. Install all other removed parts, refer to applicable subsections.

KNOCK SENSOR (KS)

Knock Sensor Location

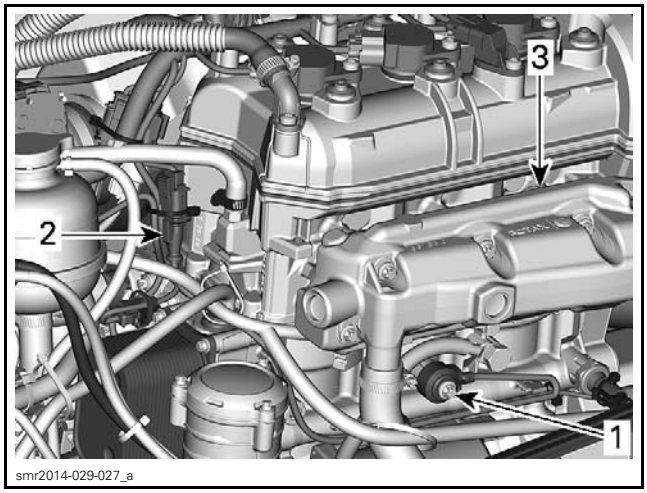

KNOCK SENSOR LOCATION - LH SIDE OF ENGINE
1. Knock sensor (KS)
2. Knock sensor connector
3. Exhaust manifold

KS Dynamic Test

1. Connect watercraft to B.U.D.S. software, refer to *COMMUNICATION TOOLS AND B.U.D.S.* subsection.
2. In B.U.D.S., click the Faults tab and look for a Knock sensor fault.

NOTICE **The engine must not be run out of water without providing proper cooling to the exhaust system. Maximum engine run time out of water is 2 minutes. Failure to do so may result in damage to the exhaust system and engine. Refer to *EXHAUST SYSTEM* subsection.**

3. Start engine and throttle it to above 5000 RPM.
4. Using the B.U.D.S. software, monitor the knock sensor for a fault code.

If no fault occurs, knock sensor is good.

If a fault occurs, carry out following steps.

5. Ensure sensor and cylinder head contact surfaces are clean.
6. Ensure correct mounting bolt and washer are used and properly torqued.
7. Check knock sensor resistance, refer to *KS RESISTANCE TEST*.

KS Resistance Test

1. Remove parts required to access knock sensor, refer to *KS REPLACEMENT.*
2. Disconnect knock sensor connector.

3. Using a multimeter, measure the resistance between the knock sensor terminals.

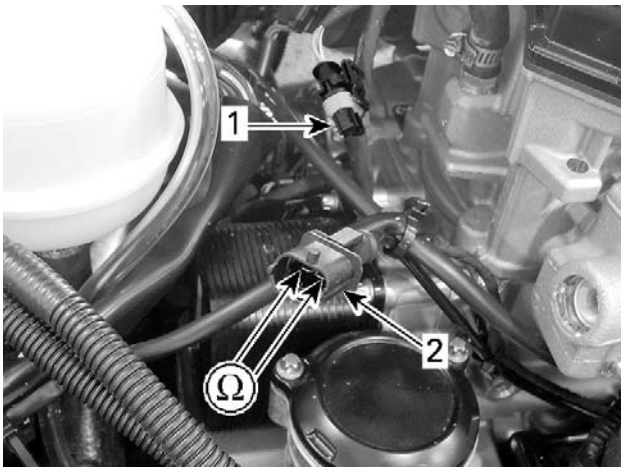

smr2014-029-035_a

KNOCK SENSOR RESISTANCE @ 20°C (68°F)
Approximately 5 MΩ

If resistance is not as specified, replace knock sensor.

If resistance is as specified, carry on with the following steps.

4. Reconnect knock sensor connector.
5. Disconnect ECM-A connector.
6. Using a multimeter and ECM adapter tool, check circuit resistance through the knock sensor as per following table.

REQUIRED TOOL	
ECM ADAPTER TOOL (P/N 529 036 166)	

ECM ADAPTER		MEASUREMENT
PIN		RESISTANCE @ 20°C (68°F)
A-C3	A-G2	Approximately 5 MΩ

If wiring harness is good, check ECM. Refer to *ENGINE CONTROL MODULE (ECM)* in this section.

If an open circuit is measured, repair or replace wiring and connectors between ECM and knock sensor.

KS Replacement

1. Disconnect KS sensor connector.
2. Unscrew and remove knock sensor from engine.

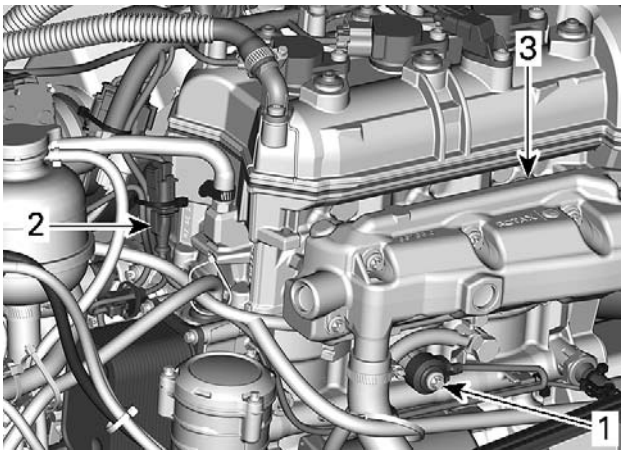

smr2014-029-027_a

1. *Knock sensor (KS)*
2. *Knock sensor connector*
3. *Exhaust manifold*

3. Clean contact surfaces.
4. Apply service product in threaded hole then install the new knock sensor.
5. Tighten sensor retaining screw as specified.

KNOCK SENSOR INSTALLATION	
Mounting screw	SERVICE PRODUCT
	LOCTITE 243 (BLUE) (P/N 293 800 060)
	TORQUE
	23 N•m ± 3 N•m (17 lbf•ft ± 2 lbf•ft)
Harness Connector	SERVICE PRODUCT
	DIELECTRIC GREASE (P/N 293 550 004)

NOTICE **Improper torque may interfere with knock sensor operation and lead to severe internal engine damage.**

6. Reconnect knock sensor connector.
7. Reinstall remaining removed parts, refer to applicable subsections.